APPLIED RESEARCH AND TECHNOLOGY

www.artproaudio.com
E-mail: support@artproaudio.com

© 2016 Applied Research & Technology • Yorkville Sound

Printed in Canada

APPLIED RESEARCH AND TECHNOLOGY

SERVICE MANUAL

RM5

SMT Disclaimer

Due to the complex nature of the use of SMT installed components in Yorkville equipment, we highly caution all service technicians in attempting to repair or replace SMT factory installed components.

Many of these components may be glued prior to initial soldering.

Replacing SMT components requires expensive specialized de-soldering equipment and training.

Yorkville Sound will repair and replace defective SMT components to ensure proper quality assurance and installation is maintained.

Manual-Service-ART-RM5-00-1v1 ĚOct 22/2020

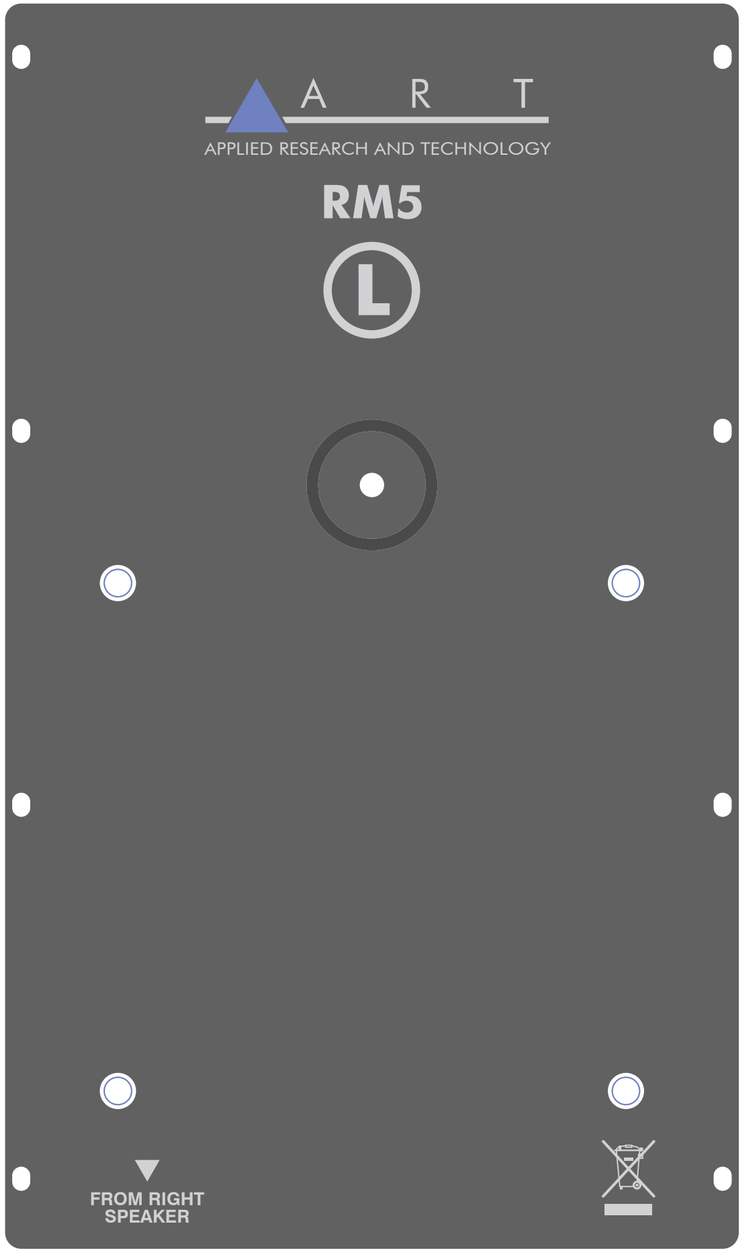
A R T
APPLIED RESEARCH AND TECHNOLOGY
RM5
L
FROM RIGHT
SPEAKER

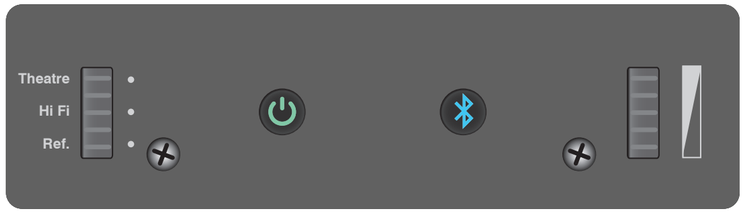
Theatre
Hi Fi
Ref.

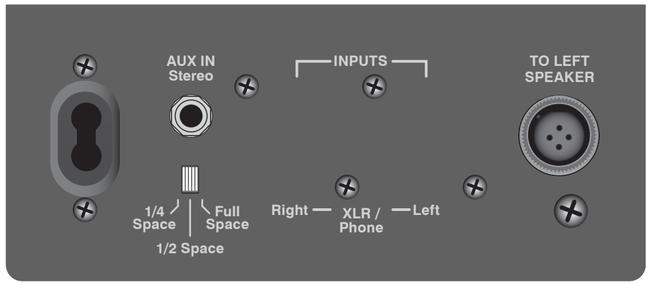
AUX IN
Stereo
INPUTS
TO LEFT
SPEAKER
1/4
Space
Full
Space
1/2 Space
Right
XLR /
Phone
Left

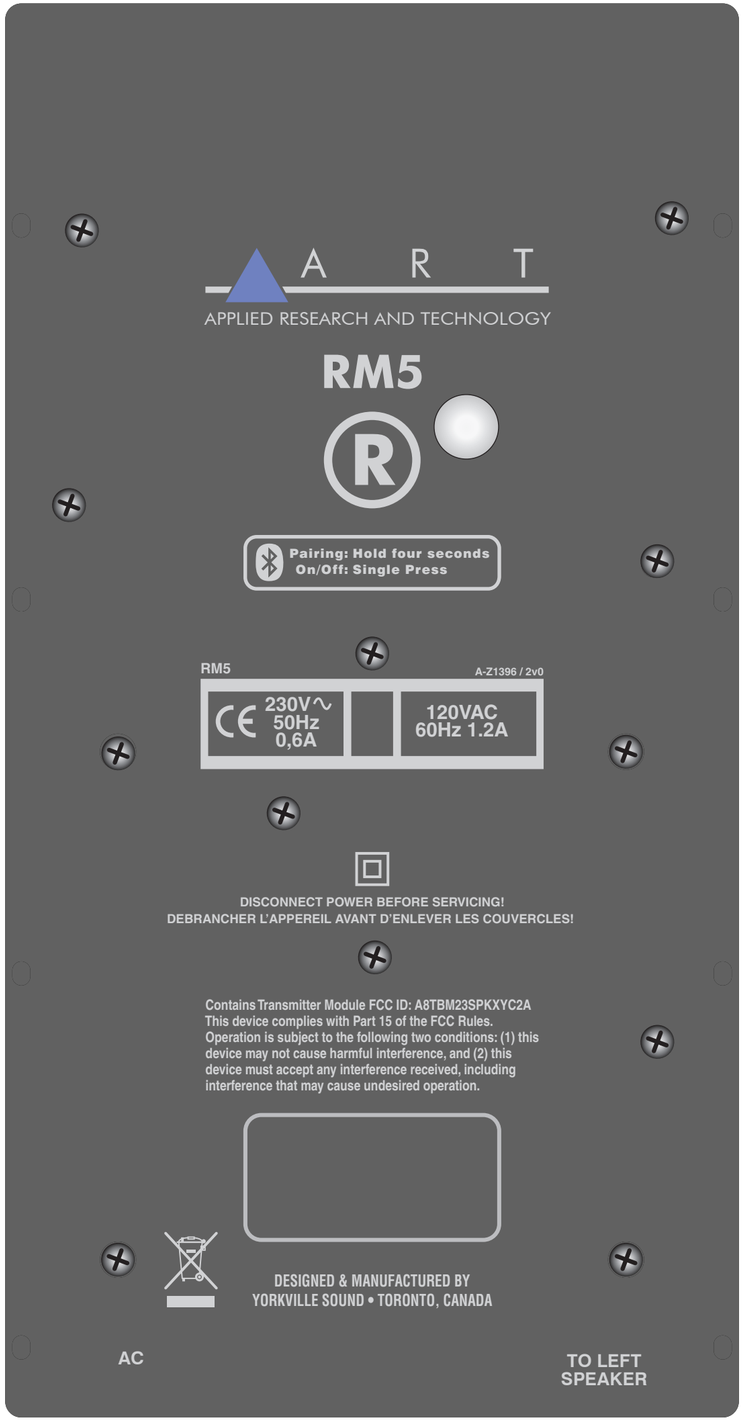
A R T
APPLIED RESEARCH AND TECHNOLOGY
RM5
R
Pairing: Hold four seconds
On/Off: Single Press
RM5
A-Z1396 / 2v0
230V∿
50Hz
0,6A
120VAC
60Hz 1.2A
DISCONNECT POWER BEFORE SERVICING!
DEBRANCHER L'APPEREIL AVANT D'ENLEVER LES COUVERCLES!
Contains Transmitter Module FCC ID: A8TBM23SPKXYC2A
This device complies with Part 15 of the FCC Rules.
Operation is subject to the following two conditions: (1) this
device may not cause harmful interference, and (2) this
device must accept any interference received, including
interference that may cause undesired operation.
DESIGNED & MANUFACTURED BY
YORKVILLE SOUND • TORONTO, CANADA
AC
TO LEFT
SPEAKER

SPECIFICATIONS

System Type	Active 2-Way Stereo
Program Power (Watts)	300 W
Max SPL (dB)	109
Frequency Response (Hz +/- 3dB)	45-22,000
Crossover Frequency (Hz)	2200
HF Driver(s)	High Resolution Ring Radiator Center Plug to Improve Off Axis Response
HF Program Power (Watts)	25W (x 2)
LF Driver(s)	5-inch High X-Max Composite woofer
LF Program Power (Watts)	125W (x 2)
LF Protection	Thermal / Peak (X-max)
Inputs	2 x XLR & ¼-inch TRS Balanced Combi-Jacks (Left/Right), Stereo 1/8-inch TRS Jack / Bluetooth™ Wireless Streaming
Mode Controls	Reference, HiFi, and Theatre Room Compensation 1/4 Space, 1/2 Space and Full Space
Level Controls	Master Level
Cabinet Material	Aluminum Unibody Design
Power Supply	USA – 105 to 125 VAC /60HZ Export units are configured for country of destination
Bass Principal	Dual Opposing Passive Radiator
Dimensions (H, W, D)	12.4-inch x 7.6-inch x 3.6-inch each speaker 31mm x 19mm x 9mm each speaker
Weight	20lbs / 9kg (Pair)

ART maintains a policy of constant product improvement. ART reserves the right to make changes in design, or make additions to, or improvements upon, this product without any obligation to install same on products previously manufactured. Therefore, specifications are subject to change without notice.

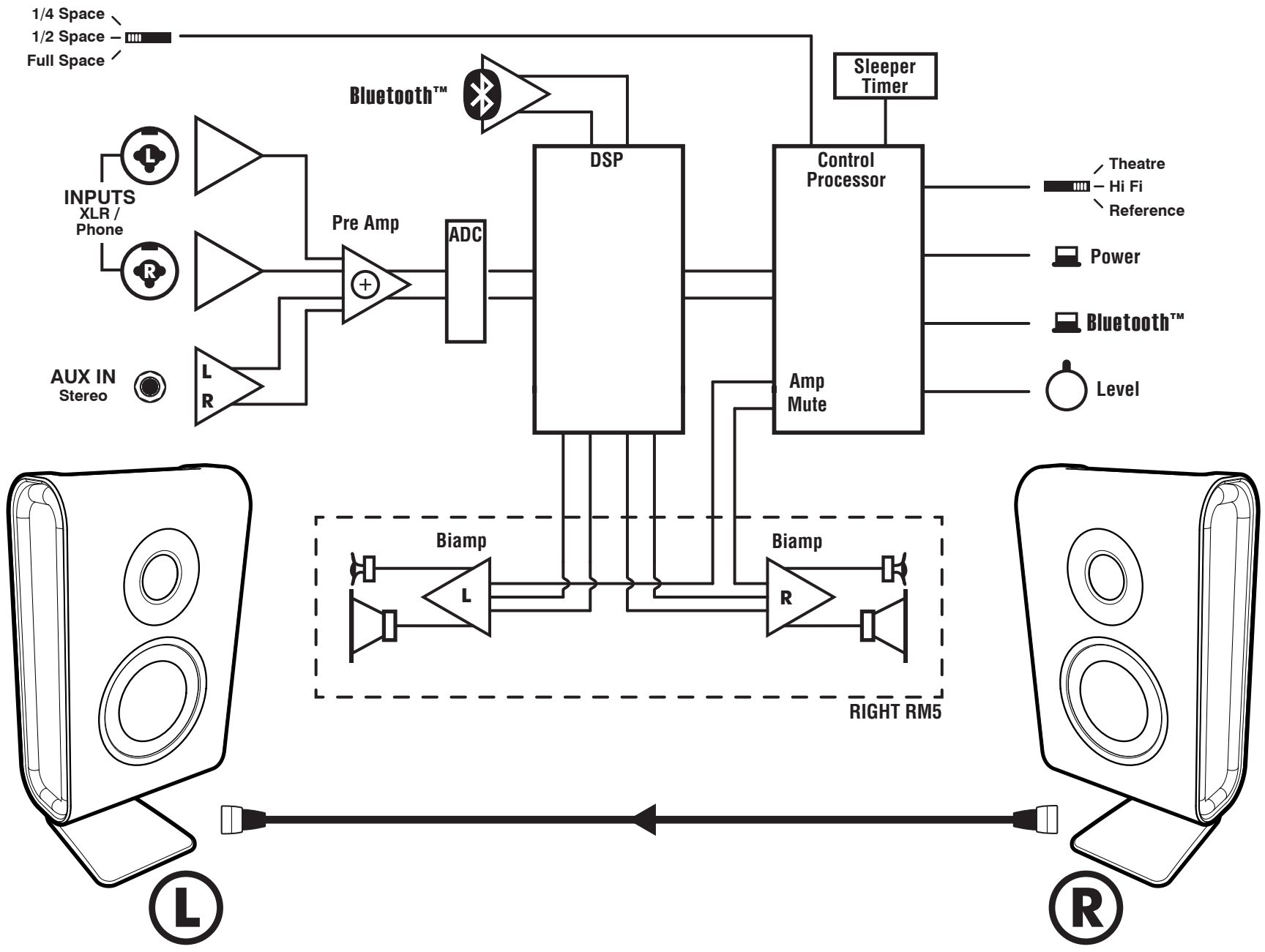
1/4 Space
1/2 Space
Full Space
Bluetooth™
Sleeper Timer
DSP
Control Processor
Theatre
Hi Fi
Reference
INPUTS
XLR / Phone
Pre Amp
ADC
Power
Bluetooth™
AUX IN
Stereo
L
R
Amp Mute
Level
Biamp
Biamp
L
R
RIGHT RM5
L
R

M1494 03 Parts Reference List 10/22/2020

REF	YS #	Description	REF	YS #	Description	REF	YS #	Description	REF	YS #	Description	REF	YS #	Description
AI-ASS	M1494-59	RM5 POWER AMP PCB	Q3		MMBT5401 PNP SOT-23 SMT	R153A		W100 15K0 1% 0805 SMT RES	U8A		33078 DUAL OPAMP SMT SO-8			
C1A		__5N6 50V 5%CAP 0805 SMT C0G	Q4		MJD127 PNP DARL DPAK3 SMT	R153B		W100 15K0 1% 0805 SMT RES	U8B		33078 DUAL OPAMP SMT SO-8			
C1B		__5N6 50V 5%CAP 0805 SMT C0G	Q21A		MJD122 NPN DARL DPAK3 SMT	R156A		W100 15K0 1% 0805 SMT RES	U23A		33078 DUAL OPAMP SMT SO-8			
C2A		__5N6 50V 5%CAP 0805 SMT C0G	Q21B		MJD122 NPN DARL DPAK3 SMT	R156B		W100 15K0 1% 0805 SMT RES	U23B		33078 DUAL OPAMP SMT SO-8			
C2B		__5N6 50V 5%CAP 0805 SMT C0G	Q23A		MMBTA64LT1G PNP DARL SOT-23 SMT	R162A		W125 47R 5% 0805 SMT RES	W1		26 PIN 25SQ 100 PIN SIL SMT			
C3A		__1N 50V 5%CAP 0805 SMT NPO	Q23B		MMBTA64LT1G PNP DARL SOT-23 SMT	R162B		W125 47R 5% 0805 SMT RES	ZD1A		MM3Z12VT1G 12V0 0W2 5% SMT ZEN			
C3B		__1N 50V 5%CAP 0805 SMT NPO	Q24A		MMBF4391LT1 NCH JFET SOT-23 SMT T&R	R166A		W100 1K0 1% 0805 SMT RES	ZD1B		MM3Z12VT1G 12V0 0W2 5% SMT ZEN			
C4A		_10U 16V 20%CAP SMT ELC	Q24B		MMBF4391LT1 NCH JFET SOT-23 SMT T&R	R166B		W100 1K0 1% 0805 SMT RES	ZD2A		MM3Z12VT1G 12V0 0W2 5% SMT ZEN			
C4B		_10U 16V 20%CAP SMT ELC	Q25A		MJD127 PNP DARL DPAK3 SMT	R190A		W250 330R 5% 1206 SMT RES	ZD2B		MM3Z12VT1G 12V0 0W2 5% SMT ZEN			
C5		__1U 50V 20%CAP 3.3MM SMT ELE	Q25B		MJD127 PNP DARL DPAK3 SMT	R190B		W250 330R 5% 1206 SMT RES	ZD3A		MM3Z15VT1G 15V0 0W2 5% SMT ZEN			
C6A		__1N 50V 5%CAP 0805 SMT NPO	Q26A		IRF530NS NCH MFET D2PAK SMT TS	R196A		W250 330R 5% 1206 SMT RES	ZD3B		MM3Z15VT1G 15V0 0W2 5% SMT ZEN			
C6B		__1N 50V 5%CAP 0805 SMT NPO	Q26B		IRF530NS NCH MFET D2PAK SMT TS	R196B		W250 330R 5% 1206 SMT RES	ZD4A		MM3Z12VT1G 12V0 0W2 5% SMT ZEN			
C7		__1U 50V 20%CAP 3.3MM SMT ELE	Q27A		MJD122 NPN DARL DPAK3 SMT	R197A		W125 47R 5% 0805 SMT RES	ZD4B		MM3Z12VT1G 12V0 0W2 5% SMT ZEN			
C38A		220U 16V 20%CAP 8X6.5 SMT ELE	Q27B		MJD122 NPN DARL DPAK3 SMT	R197B		W125 47R 5% 0805 SMT RES	ZD5A		MM3Z15VT1G 15V0 0W2 5% SMT ZEN			
C38B		220U 16V 20%CAP 8X6.5 SMT ELE	Q28A		MJD122 NPN DARL DPAK3 SMT	R199A		W250 330R 5% 1206 SMT RES	ZD5B		MM3Z15VT1G 15V0 0W2 5% SMT ZEN			
C49A		100N 50V 5%CAP 0805 SMT X7R	Q28B		MJD122 NPN DARL DPAK3 SMT	R199B		W250 330R 5% 1206 SMT RES	ZD6A		MM3Z15VT1G 15V0 0W2 5% SMT ZEN			
C49B		100N 50V 5%CAP 0805 SMT X7R	Q29A		MMBTA64LT1G PNP DARL SOT-23 SMT	R200A		W250 330R 5% 1206 SMT RES	ZD6B		MM3Z15VT1G 15V0 0W2 5% SMT ZEN			
C50A		__1N 50V 5%CAP 0805 SMT NPO	Q29B		MMBTA64LT1G PNP DARL SOT-23 SMT	R200B		W250 330R 5% 1206 SMT RES						
C50B		__1N 50V 5%CAP 0805 SMT NPO	Q30A		MMBF4391LT1 NCH JFET SOT-23 SMT T&R	R223A		W100 100R 1% 0805 SMT RES						
C51A		220U 16V 20%CAP 8X6.5 SMT ELE	Q30B		MMBF4391LT1 NCH JFET SOT-23 SMT T&R	R223B		W100 100R 1% 0805 SMT RES						
C51B		220U 16V 20%CAP 8X6.5 SMT ELE	Q31A		MJD127 PNP DARL DPAK3 SMT	R224A		W100 2K74 1% 0805 SMT RES						
C52A		__1N 50V 5%CAP 0805 SMT NPO	Q31B		MJD127 PNP DARL DPAK3 SMT	R224B		W100 2K74 1% 0805 SMT RES						
C52B		__1N 50V 5%CAP 0805 SMT NPO	Q32A		MJD127 PNP DARL DPAK3 SMT	R225A		W125 47R 5% 0805 SMT RES						
C53A		_27P 50V 5%CAP 0805 SMT NPO	Q32B		MJD127 PNP DARL DPAK3 SMT	R225B		W125 47R 5% 0805 SMT RES						
C53B		_27P 50V 5%CAP 0805 SMT NPO	Q33A		IRF9530NS PCH MFET D2PAK SMT TS	R226A		W125 5K76 1% 0805 SMT RES						
C59A		__5N6 50V 5%CAP 0805 SMT C0G	Q33B		IRF9530NS PCH MFET D2PAK SMT TS	R226B		W125 5K76 1% 0805 SMT RES						
C59B		__5N6 50V 5%CAP 0805 SMT C0G	R1A		W125 47R 5% 0805 SMT RES	R227A		W125 30K 0.5% 0805 SMT RES						
C60A		_10U 16V 20%CAP SMT ELC	R1B		W125 47R 5% 0805 SMT RES	R227B		W125 30K 0.5% 0805 SMT RES						
C60B		_10U 16V 20%CAP SMT ELC	R2A		W125 47R 5% 0805 SMT RES	R228A		W125 10R0 1% 0805 SMT RES						
C62A		100P 50V 10%CAP 0805 SMT NPO	R2B		W125 47R 5% 0805 SMT RES	R228B		W125 10R0 1% 0805 SMT RES						
C62B		100P 50V 10%CAP 0805 SMT NPO	R3		W125 10R0 1% 0805 SMT RES	R229A		W333 33R 5% 1210 SMT RES						
C64A		_10U 16V 20%CAP SMT ELC	R4		W100 301R 1% 0805 SMT RES	R229B		W333 33R 5% 1210 SMT RES						
C64B		_10U 16V 20%CAP SMT ELC	R5		W100 15K0 1% 0805 SMT RES	R230A		W125 47R 5% 0805 SMT RES						
C65A		__1N 50V 5%CAP 0805 SMT NPO	R6A		W250 0R 1206 SMT RES	R230B		W125 47R 5% 0805 SMT RES						
C65B		__1N 50V 5%CAP 0805 SMT NPO	R6B		W250 0R 1206 SMT RES	R231A		W125 2K2 5% 0805 SMT RES						
C66A		220U 16V 20%CAP 8X6.5 SMT ELE	R7		W125 10R0 1% 0805 SMT RES	R231B		W125 2K2 5% 0805 SMT RES						
C66B		220U 16V 20%CAP 8X6.5 SMT ELE	R8		W100 301R 1% 0805 SMT RES	R232A		W125 5K76 1% 0805 SMT RES						
C67A		100N 50V 5%CAP 0805 SMT X7R	R9		W100 15K0 1% 0805 SMT RES	R232B		W125 5K76 1% 0805 SMT RES						
C67B		100N 50V 5%CAP 0805 SMT X7R	R10		W125 10R0 1% 0805 SMT RES	R233A		1W00 0R047 5% 2512 SMT RES						
C68A		__1N 50V 5%CAP 0805 SMT NPO	R11A		W125 10R0 1% 0805 SMT RES	R233B		1W00 0R047 5% 2512 SMT RES						
C68B		__1N 50V 5%CAP 0805 SMT NPO	R11B		W125 10R0 1% 0805 SMT RES	R234A		1W00 0R047 5% 2512 SMT RES						
C69A		_47P 100V 5%CAP 0805 SMT NPO	R12		W125 10R0 1% 0805 SMT RES	R234B		1W00 0R047 5% 2512 SMT RES						
C69B		_47P 100V 5%CAP 0805 SMT NPO	R13A		W125 33R 5% 0805 SMT RES	R235A		W125 30K 0.5% 0805 SMT RES						
C70A		__1N 50V 5%CAP 0805 SMT NPO	R13B		W125 33R 5% 0805 SMT RES	R235B		W125 30K 0.5% 0805 SMT RES						
C70B		__1N 50V 5%CAP 0805 SMT NPO	R45A		W125 47R 5% 0805 SMT RES	R236A		1W00 0R047 5% 2512 SMT RES						
C71A		_10U 16V 20%CAP SMT ELC	R45B		W125 47R 5% 0805 SMT RES	R236B		1W00 0R047 5% 2512 SMT RES						
C71B		_10U 16V 20%CAP SMT ELC	R46A		W250 330R 5% 1206 SMT RES	R237A		1W00 0R047 5% 2512 SMT RES						
C72A		220U 16V 20%CAP 8X6.5 SMT ELE	R46B		W250 330R 5% 1206 SMT RES	R237B		1W00 0R047 5% 2512 SMT RES						
C72B		220U 16V 20%CAP 8X6.5 SMT ELE	R47A		W250 330R 5% 1206 SMT RES	R240A		W100 15K0 1% 0805 SMT RES						
C95A		330P 50V 5%CAP 0805 SMT NPO	R47B		W250 330R 5% 1206 SMT RES	R240B		W100 15K0 1% 0805 SMT RES						
C95B		330P 50V 5%CAP 0805 SMT NPO	R48A		W125 47R 5% 0805 SMT RES	R242A		W125 49K9 1% 0805 SMT RES						
D1		MM3Z12VT1G 12V0 0W2 5% SMT ZEN	R48B		W125 47R 5% 0805 SMT RES	R242B		W125 49K9 1% 0805 SMT RES						
D2		MM3Z12VT1G 12V0 0W2 5% SMT ZEN	R64A		W100 2K74 1% 0805 SMT RES	R243A		W125 470R 5% 0805 SMT RES						
D24A		BAS21L 250V 200MA SOT23 SMT	R64B		W100 2K74 1% 0805 SMT RES	R243B		W125 470R 5% 0805 SMT RES						
D24B		BAS21L 250V 200MA SOT23 SMT	R98A		W125 10R0 1% 0805 SMT RES	R244A		W125 10R0 1% 0805 SMT RES						
D30A		CDSF4148 75V 0A15 1005 SMT	R98B		W125 10R0 1% 0805 SMT RES	R244B		W125 10R0 1% 0805 SMT RES						
D30B		CDSF4148 75V 0A15 1005 SMT	R99A		W333 33R 5% 1210 SMT RES	R245A		W333 33R 5% 1210 SMT RES						
D32A		BAS21L 250V 200MA SOT23 SMT	R99B		W333 33R 5% 1210 SMT RES	R245B		W333 33R 5% 1210 SMT RES						
D32B		BAS21L 250V 200MA SOT23 SMT	R102A		W125 30K 0.5% 0805 SMT RES	R246A		W100 1K0 1% 0805 SMT RES						
D33A		BAS21L 250V 200MA SOT23 SMT	R102B		W125 30K 0.5% 0805 SMT RES	R246B		W100 1K0 1% 0805 SMT RES						
D33B		BAS21L 250V 200MA SOT23 SMT	R114A		W100 301R 1% 0805 SMT RES	R247A		W125 47R 5% 0805 SMT RES						
D34A		BAS21L 250V 200MA SOT23 SMT	R114B		W100 301R 1% 0805 SMT RES	R247B		W125 47R 5% 0805 SMT RES						
D34B		BAS21L 250V 200MA SOT23 SMT	R115A		1W00 0R047 5% 2512 SMT RES	R248A		W100 15K0 1% 0805 SMT RES						
D35A		MURA240T3 400V 2A DIO 403D SMT	R115B		1W00 0R047 5% 2512 SMT RES	R248B		W100 15K0 1% 0805 SMT RES						
D35B		MURA240T3 400V 2A DIO 403D SMT	R116A		W125 30K 0.5% 0805 SMT RES	R249A		W125 47R 5% 0805 SMT RES						
D37A		MURA240T3 400V 2A DIO 403D SMT	R116B		W125 30K 0.5% 0805 SMT RES	R249B		W125 47R 5% 0805 SMT RES						
D37B		MURA240T3 400V 2A DIO 403D SMT	R118A		W125 2K2 5% 0805 SMT RES	R250A		W250 330R 5% 1206 SMT RES						
D38A		CDSF4148 75V 0A15 1005 SMT	R118B		W125 2K2 5% 0805 SMT RES	R250B		W250 330R 5% 1206 SMT RES						
D38B		CDSF4148 75V 0A15 1005 SMT	R119A		W125 5K76 1% 0805 SMT RES	R251A		W250 330R 5% 1206 SMT RES						
D41A		BAS21L 250V 200MA SOT23 SMT	R119B		W125 5K76 1% 0805 SMT RES	R251B		W250 330R 5% 1206 SMT RES						
D41B		BAS21L 250V 200MA SOT23 SMT	R141A		1W00 0R047 5% 2512 SMT RES	R252A		W100 100R 1% 0805 SMT RES						
D42A		BAS21L 250V 200MA SOT23 SMT	R141B		1W00 0R047 5% 2512 SMT RES	R252B		W100 100R 1% 0805 SMT RES						
D42B		BAS21L 250V 200MA SOT23 SMT	R143A		W125 470R 5% 0805 SMT RES	TP1A		TEST POINT MINIATURE SMT						
P2A		_10K 25% ACP KAP TRIM POT SMT T&R	R143B		W125 470R 5% 0805 SMT RES	TP1B		TEST POINT MINIATURE SMT						
P2B		_10K 25% ACP KAP TRIM POT SMT T&R	R144A		W125 49K9 1% 0805 SMT RES	TP2A		TEST POINT MINIATURE SMT						
P3A		_10K 25% ACP KAP TRIM POT SMT T&R	R144B		W125 49K9 1% 0805 SMT RES	TP2B		TEST POINT MINIATURE SMT						
P3B		_10K 25% ACP KAP TRIM POT SMT T&R	R145A		W125 10R0 1% 0805 SMT RES	TP3A		TEST POINT MINIATURE SMT						
PCB	M1494BLANK	2 OZ 1SD 77.44SQIN 06PER 1.5MM ALUM	R145B		W125 10R0 1% 0805 SMT RES	TP3B		TEST POINT MINIATURE SMT						
Q1		MJD122 NPN DARL DPAK3 SMT	R146A		W333 33R 5% 1210 SMT RES	TP4A		TEST POINT MINIATURE SMT						
Q2		MMBT3904 NPN SOT-23 SMT	R146B		W333 33R 5% 1210 SMT RES	TP4B		TEST POINT MINIATURE SMT						

M1705 02 Parts Reference List 10/22/2020

REF	YS #	Description	REF	YS #	Description	REF	YS #	Description	REF	YS #	Description	REF	YS #	Description
AI-ASS	M1705-59	RM5 POWER AMP, SUPPLY, INPUT PCB~	C112		470P 50V 5%CAP 0603 SMT NPO	R24		W100 100R 1% 0805 SMT RES	R118		W125 47K 5% 0805 SMT RES			
C1		10U 25V 20%CAP 5X5.4 SMT EL	C117		22U 25V 20%CAP 1210 SMT X7R	R25		W125 47K 5% 0805 SMT RES	R119		W100 100R 1% 0805 SMT RES			
C2	6451	4N7 250V 20%CAP BLK 'Y' 10MM AC	C134		100N 50V 5%CAP 0805 SMT X7R	R26		W125 47R 5% 0805 SMT RES	R120		W100 100R 1% 0805 SMT RES			
C3	5863	6800U 25V 20%CAP BLK 16X40MM EL	C145	5635	1000U 35V 20%CAP BLK RADIAL ELECT	R27		W100 100R 1% 0805 SMT RES	R121		W100 10K0 1% 0805 SMT RES			
C4	5863	6800U 25V 20%CAP BLK 16X40MM EL	C195		10U 25V 20%CAP 5X5.4 SMT EL	R28		W063 4K02 1% 0603 SMT RES	R122		W125 0R 5% 0805 SMT RES			
C5	5863	6800U 25V 20%CAP BLK 16X40MM EL	D1		ES3D 200V 3A0 D214 SMT SMC	R29		W125 1M 5% 0805 SMT RES	R123		W125 0R 5% 0805 SMT RES			
C6		100N 16V 10%CAP 0603 SMT X7R	D2		ES3D 200V 3A0 D214 SMT SMC	R30		W100 10K0 1% 0805 SMT RES	R124		W100 4K75 1% 0805 SMT RES			
C7		10U 10V 10%CAP 1206 SMT X5R	D3		ES3D 200V 3A0 D214 SMT SMC	R31		W100 10K0 1% 0805 SMT RES	R125		W100 10K0 1% 0805 SMT RES			
C8		100N 16V 10%CAP 0603 SMT X7R	D4		ES3D 200V 3A0 D214 SMT SMC	R32		W125 3K92 1% 0805 SMT RES	R126		W125 47K 5% 0805 SMT RES			
C9		100N 16V 10%CAP 0603 SMT X7R	D5		ES3D 200V 3A0 D214 SMT SMC	R33		W100 100R 1% 0805 SMT RES	R127		W125 47K 5% 0805 SMT RES			
C10		100N 16V 10%CAP 0603 SMT X7R	D6		CDSF4148 75V 0A15 1005 SMT	R34		W125 47K 5% 0805 SMT RES	R128		W100 10K0 1% 0805 SMT RES			
C11		10U 10V 10%CAP 1206 SMT X5R	D7		ES3D 200V 3A0 D214 SMT SMC	R35		W063 4K02 1% 0603 SMT RES	R129		W100 4K75 1% 0805 SMT RES			
C12		100N 16V 10%CAP 0603 SMT X7R	D8		ES3D 200V 3A0 D214 SMT SMC	R36		W125 3K92 1% 0805 SMT RES	R130		W100 6K98 1% 0805 SMT RES			
C13		100N 16V 10%CAP 0603 SMT X7R	D9		ES3D 200V 3A0 D214 SMT SMC	R37		W100 100R 1% 0805 SMT RES	R137		W100 1K0 1% 0805 SMT RES			
C14		10U 10V 10%CAP 1206 SMT X5R	D10		CDSF4148 75V 0A15 1005 SMT	R38		W125 47K 5% 0805 SMT RES	R150		W125 47R 5% 0805 SMT RES			
C15		100N 16V 10%CAP 0603 SMT X7R	D11		CDSF4148 75V 0A15 1005 SMT	R39		W063 4K02 1% 0603 SMT RES	R151		W125 47R 5% 0805 SMT RES			
C16		3N3 25V 5%CAP 0805 SMT NPO	D12		MBRA340T3 40V 3A SHTKY 403D SMT	R40		W100 10K0 1% 0805 SMT RES	R154		W125 47R 5% 0805 SMT RES			
C17		220N 50V 10%CAP 1206 SMT X7R	D13		MM3Z18VT1G 18V0 0W2 5% SMT ZEN	R41		W125 3K92 1% 0805 SMT RES	R155		W125 47R 5% 0805 SMT RES			
C18		10U 10V 10%CAP 1206 SMT X5R	D14		CDSF4148 75V 0A15 1005 SMT	R42		W100 100R 1% 0805 SMT RES	R164		W125 47R 5% 0805 SMT RES			
C19		100N 16V 10%CAP 0603 SMT X7R	D15		CDSF4148 75V 0A15 1005 SMT	R43		W100 18K2 1% 0805 SMT RES	R169		W100 100R 1% 0805 SMT RES			
C20		10U 10V 10%CAP 1206 SMT X5R	D17		CDSF4148 75V 0A15 1005 SMT	R44		W125 47K 5% 0805 SMT RES	R213		W100 1K02 1% 0603 SMT RES			
C21		100U 25V 20%CAP 8X5.4 SMT ELE	D18		CDSF4148 75V 0A15 1005 SMT	R45		W125 47K 5% 0805 SMT RES	R214		W100 1K02 1% 0603 SMT RES			
C22		100N 16V 10%CAP 0603 SMT X7R	D19		CDSF4148 75V 0A15 1005 SMT	R46		W100 1K02 1% 0603 SMT RES	R215		W100 100R 1% 0805 SMT RES			
C23		10U 10V 10%CAP 1206 SMT X5R	D20		CDSF4148 75V 0A15 1005 SMT	R47		W125 1M 5% 0805 SMT RES	R216		W100 4K99 1% 0805 SMT RES			
C24		100N 16V 10%CAP 0603 SMT X7R	D21		5237B 8V2 0W2 SOT-23 SMT ZEN	R48		W250 4R7 5% 1206 SMT RES	R221		W100 4K99 1% 0805 SMT RES			
C25		220P 100V 10%CAP 0805 SMT X7R	D22		CDSF4148 75V 0A15 1005 SMT	R49		W750 0R 1% 2010 SMT JMP	R222		W100 4K99 1% 0805 SMT RES			
C26		1U 50V 20%CAP 4.3X3.9 SMT ELC	D23		CDSF4148 75V 0A15 1005 SMT	R51		W100 1K02 1% 0603 SMT RES	R274		W125 47R 5% 0805 SMT RES			
C27		1U 50V 20%CAP 4.3X3.9 SMT ELC	D24		5237B 8V2 0W2 SOT-23 SMT ZEN	R54		W063 4K02 1% 0603 SMT RES	S1	4200	SP3T ROTA SW PCMT H RS1201			
C28		1U 50V 20%CAP 4.3X3.9 SMT ELC	D25		CDSF4148 75V 0A15 1005 SMT	R55		W100 4K99 1% 0805 SMT RES	S2	3522	DPDT MINI PC VERT SNP ALT			
C29		100N 16V 10%CAP 0603 SMT X7R	D26		CDSF4148 75V 0A15 1005 SMT	R60		W125 64K9 1% 0805 SMT RES	S3	3439	DPDT MINI PC VERT MOMENTARY			
C30		100N 16V 10%CAP 0603 SMT X7R	D27		CDSF4148 75V 0A15 1005 SMT	R61		W063 4K02 1% 0603 SMT RES	S4	6548	2P3T SLID SW PCMT V			
C31		100N 16V 10%CAP 0603 SMT X7R	D28		CDSF4148 75V 0A15 1005 SMT	R62		W100 4K99 1% 0805 SMT RES	T4	1254	1VA 16V XFMR 36X31X25MM 115/230			
C32		100N 16V 10%CAP 0603 SMT X7R	D29		CDSF4148 75V 0A15 1005 SMT	R65		W100 1K02 1% 0603 SMT RES	U1		LM1117 REGULATOR 5V0 SMT SOT223			
C33		100N 16V 10%CAP 0603 SMT X7R	F1	2493	FUSE T3.15A 300V RAD SLOW T&R	R67		W100 4K99 1% 0805 SMT RES	U2		ADAU1401 28/56 DSP 2AD4DA SMT IC			
C34		100N 50V 5%CAP 0805 SMT X7R	J1	4090	1/4IN &XLR PCB MT VERT COMBO NCJ6-V	R68		W125 64K9 1% 0805 SMT RES	U3		MKL15Z64VLH4 48MHZ MCU SMT LQFP64			
C35		100N 16V 10%CAP 0603 SMT X7R	J2	4210	RECEPTACLE 2 PRONG IEC	R69		W100 19K6 1% 0603 SMT RES	U4		LM393D DUAL COMPARATOR SMT SO-8			
C36		1U 50V 20%CAP 4.3X3.9 SMT ELC	J3	4090	1/4IN &XLR PCB MT VERT COMBO NCJ6-V	R70		W100 4K99 1% 0805 SMT RES	U5		LM2671 3V3 REG 0A5 SMT SO8			
C37		100N 16V 10%CAP 0603 SMT X7R	J4	4186	3.5MM JCK PCB MT VERT ST	R71		W063 4K02 1% 0603 SMT RES	U6		LM393D DUAL COMPARATOR SMT SO-8			
C38	5863	6800U 25V 20%CAP BLK 16X40MM EL	K1	4155	RELAY 1A 10AMP DC05 040MA PC-S HC	R72		W100 4K99 1% 0805 SMT RES	U12		33078 DUAL OPAMP SMT SO-8			
C39		4U7 25V 20%CAP 4X5.5 SMT ELC	L1		2.2UH COIL SMT	R73		W100 1K02 1% 0603 SMT RES	U13		BM23 BLUETOOTH DIGITAL SMT MOD			
C40		1U 50V 20%CAP 4.3X3.9 SMT ELC	L2		FERRITE BEAD 600R @100MHZ 0805 SMT	R74		W750 0R 1% 2010 SMT JMP	U14		33078 DUAL OPAMP SMT SO-8			
C41		47U 35V 20%CAP 6.3MM SMT ELE	L3		FERRITE BEAD 600R @100MHZ 0805 SMT	R75		W125 64K9 1% 0805 SMT RES	U16		33078 DUAL OPAMP SMT SO-8			
C42		10N 50V 10%CAP 0805 SMT X7R	L4		FERRITE BEAD 600R @100MHZ 0805 SMT	R76		W100 10K0 1% 0805 SMT RES	U18		MC33079D QUAD OPAMP SMT SO14			
C43		47U 35V 20%CAP 6.3MM SMT ELE	L5		120.0UH COIL SR4018T 1R6 SMT	R77		W063 4K02 1% 0603 SMT RES	W1	6535	HEADER:SIL 26 SOCKET			
C44		15U 35V 10%CAP 6032 SMT TNT	LD2		RD/GN LED 2V1 20MA 0805 SMT	R78		W100 4K99 1% 0805 SMT RES	W3	2337	4 CIR XH-HEADER 0.098IN			
C49		100U 10V 20%CAP 3528 SMT TNT	LD3		RD/GN LED 2V1 20MA 0805 SMT	R79		W100 10K0 1% 0805 SMT RES	W3_	2337	4 CIR XH-HEADER 0.098IN			
C50		10U 10V 10%CAP 1206 SMT X5R	LD4		BL/RD LED 2V1 20MA 0805 SMT	R80		W100 19K6 1% 0603 SMT RES	W4	3465	WIRE TO BOARD CRIMP 16-18 AWG TIN			
C51		47P 50V 5%CAP 0805 SMT NPO	LD8		BL/RD LED 2V1 20MA 0805 SMT	R81		W100 4K99 1% 0805 SMT RES	W4_	3465	WIRE TO BOARD CRIMP 16-18 AWG TIN			
C52		47N 100V 10%CAP 1206 SMT X7R	LED1		RD/GN LED 2V1 20MA 0805 SMT	R82		W100 4K99 1% 0805 SMT RES	W6	4162	2 PIN POWER PIN HEADER MALE POLZED			
C53		47N 100V 10%CAP 1206 SMT X7R	M1203		W750 0R 1% 2010 SMT JMP	R83		W100 4K99 1% 0805 SMT RES	W7	4163	5 PIN POWER PIN HEADER MALE POLZED			
C54		47N 100V 10%CAP 1206 SMT X7R	M1705		W750 0R 1% 2010 SMT JMP	R84		W500 10R 5% 1210 SMT RES	W8	2327	6 CIR XH-HEADER 0.098IN			
C55		47N 100V 10%CAP 1206 SMT X7R	P1	4453	50K B LIN 12MM 4PIN HORZ DT P40	R85		W100 10K0 1% 0805 SMT RES	W8_	2327	6 CIR XH-HEADER 0.098IN			
C56		1U 50V 20%CAP 4.3X3.9 SMT ELC	PCB	X8009BLANK	1 OZ 2SD 65.50SQIN 01PER RM5	R86		W100 10K0 1% 0805 SMT RES	W9	3465	WIRE TO BOARD CRIMP 16-18 AWG TIN			
C57		100N 50V 5%CAP 0805 SMT X7R	Q1		MMBT3906LT1 PNP SOT-23 SMT T&R	R87		W500 10R 5% 1210 SMT RES	W9_	3465	WIRE TO BOARD CRIMP 16-18 AWG TIN			
C59		1U 50V 20%CAP 4.3X3.9 SMT ELC	Q2		11.2896MHZ CRYSTAL 4-PIN SMT	R88		W500 10R 5% 1210 SMT RES	W10	2358	9 CIR XH-HEADER 0.098IN			
C60		10U 10V 10%CAP 1206 SMT X5R	Q3		MMBT5401 PNP SOT-23 SMT	R89		W100 100R 1% 0805 SMT RES	W10_	2381	09 CIR XH-HEADER RA 0.098IN			
C61		100N 50V 5%CAP 0805 SMT X7R	Q4		MMBTA14 NPN DARL SOT-23 SMT	R90		W100 10K0 1% 0805 SMT RES	W11	4018	10 CIR WAFER DIL VT 0.1			
C74		1N8 50V 5%CAP 0805 SMT NPO	Q6		MMBT5401 PNP SOT-23 SMT	R91		W500 10R 5% 1210 SMT RES	W13	3538	24 PIN BREAKAWAY LOCK .156			
C75		220P 100V 10%CAP 0805 SMT X7R	Q11		MMBT5401 PNP SOT-23 SMT	R92		W100 4K99 1% 0805 SMT RES	W14	2370	7 CIR PH-HEADER 2MM			
C76		22U 25V 20%CAP 1210 SMT X7R	R1		W100 475R 1% 0805 SMT RES	R93		W500 10R 5% 1210 SMT RES	W14_	2370	7 CIR PH-HEADER 2MM			
C77		1N8 50V 5%CAP 0805 SMT NPO	R2		W100 475R 1% 0805 SMT RES	R94		W100 4K75 1% 0805 SMT RES	W15	4194	2X2 3 MM MICRO MATE-N-LOK VRT			
C81		220P 100V 10%CAP 0805 SMT X7R	R3		W100 1K0 1% 0805 SMT RES	R95		W500 10R 5% 1210 SMT RES						
C82		22U 25V 20%CAP 1210 SMT X7R	R4		W500 10R 5% 1210 SMT RES	R96		W500 10R 5% 1210 SMT RES						
C83		1N8 50V 5%CAP 0805 SMT NPO	R5		W125 47R 5% 0805 SMT RES	R97		10K 5% THERMISTOR NTC 0603 SMT						
C84		220P 100V 10%CAP 0805 SMT X7R	R7		W125 47R 5% 0805 SMT RES	R98		W100 10K0 1% 0805 SMT RES						
C85		22U 25V 20%CAP 1210 SMT X7R	R8		W125 47R 5% 0805 SMT RES	R99		W100 1K02 1% 0603 SMT RES						
C86		470P 50V 5%CAP 0603 SMT NPO	R9		W100 18K2 1% 0805 SMT RES	R100		W100 100R 1% 0805 SMT RES						
C87		470P 50V 5%CAP 0603 SMT NPO	R10		W125 47R 5% 0805 SMT RES	R101		W125 11K0 1% 0805 SMT RES						
C88		100N 50V 5%CAP 0805 SMT X7R	R11		W100 1K0 1% 0805 SMT RES	R102		W100 10K0 1% 0805 SMT RES						
C89		100N 50V 5%CAP 0805 SMT X7R	R12		W125 47R 5% 0805 SMT RES	R103		W125 11K0 1% 0805 SMT RES						
C90		100N 50V 5%CAP 0805 SMT X7R	R13		W125 2K2 5% 0805 SMT RES	R104		W100 10K0 1% 0805 SMT RES						
C91		1N8 50V 5%CAP 0805 SMT NPO	R14		W063 4K02 1% 0603 SMT RES	R105		W100 4K75 1% 0805 SMT RES						
C96		100N 50V 5%CAP 0805 SMT X7R	R15		W100 10K0 1% 0805 SMT RES	R106		W100 10K0 1% 0805 SMT RES						
C97		100N 50V 5%CAP 0805 SMT X7R	R16		W100 19K6 1% 0603 SMT RES	R107		W100 4K75 1% 0805 SMT RES						
C99		470P 50V 5%CAP 0603 SMT NPO	R17		W100 19K6 1% 0603 SMT RES	R108		W100 10K0 1% 0805 SMT RES						
C100		220P 100V 10%CAP 0805 SMT X7R	R19		W750 0R 1% 2010 SMT JMP	R110		W125 47R 5% 0805 SMT RES						
C102		470P 50V 5%CAP 0603 SMT NPO	R20		W125 2K2 5% 0805 SMT RES	R111		W100 1K0 1% 0805 SMT RES						
C103		220P 100V 10%CAP 0805 SMT X7R	R21		W125 47R 5% 0805 SMT RES	R112		W100 10K0 1% 0805 SMT RES						
C110		470P 50V 5%CAP 0603 SMT NPO	R22		W125 47R 5% 0805 SMT RES	R116		W100 4K75 1% 0805 SMT RES						
C111		220P 100V 10%CAP 0805 SMT X7R	R23		W125 3K92 1% 0805 SMT RES	R117		W125 47R 5% 0805 SMT RES						

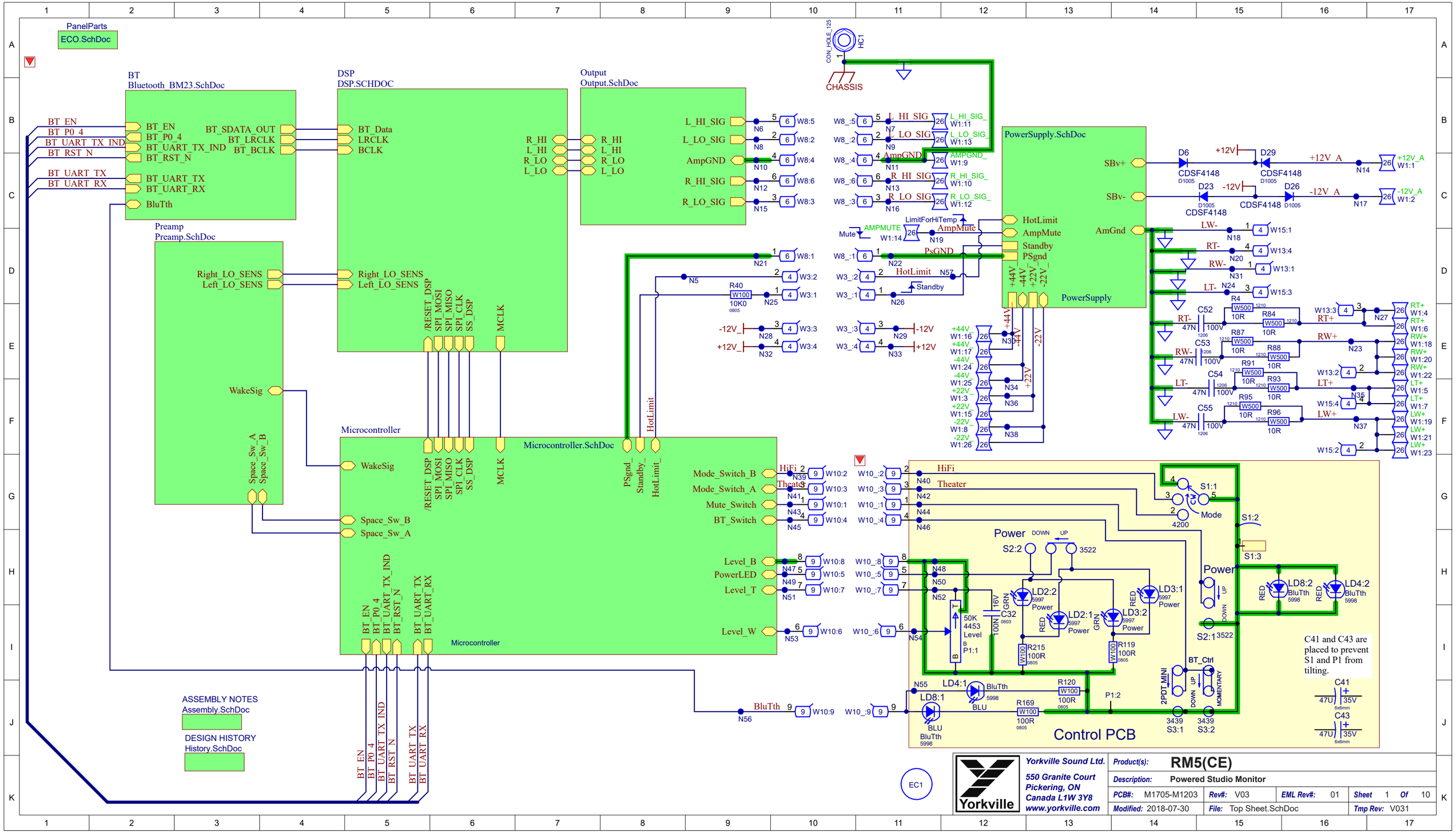
PanelParts
ECO.SchDoc
BT
Bluetooth_BM23.SchDoc
DSP
DSP.SCHDOC
Output
Output.SchDoc
Preamp
Preamp.SchDoc
Microcontroller
Microcontroller.SchDoc
PowerSupply.SchDoc
PowerSupply
CHASSIS
HC1
BT_EN
BT_P0_4
BT_UART_TX_IND
BT_RST_N
BT_UART_TX
BT_UART_RX
BluTth
BT_SDATA_OUT
BT_LRCLK
BT_BCLK
BT_Data
LRCLK
BCLK
R_HI
L_HI
R_LO
L_LO
L_HI_SIG
L_LO_SIG
AmpGND
R_HI_SIG
R_LO_SIG
Right_LO_SENS
Left_LO_SENS
/RESET_DSP
SPI_MOSI
SPI_MISO
SPI_CLK
SS_DSP
MCLK
WakeSig
Space_Sw_A
Space_Sw_B
Mode_Switch_B
Mode_Switch_A
Mute_Switch
BT_Switch
Level_B
PowerLED
Level_T
Level_W
PSgnd_
Standby_
HotLimit_
HotLimit
AmpMute
Standby
PSgnd
SBv+
SBv-
AmGnd
+12V
-12V
+12V_A
-12V_A
CDSF4148
D1005
LW-
RT-
RW-
LT-
RT+
RW+
LT+
LW+
C52
C53
C54
C55
47N
100V
R4
R84
R87
R88
R91
R93
R95
R96
10R
W500
HiFi
Theater
Power
DOWN
UP
3522
S2:2
S2:1
S1:1
S1:2
S1:3
Mode
4200
LD2:2
LD2:1
LD3:1
LD3:2
LD8:2
LD4:2
LD4:1
LD8:1
BluTth
BLU
R215
R119
R120
R169
100R
C32
16V
100N
50K
4453
Level
P1:1
P1:2
BT_Ctrl
2PDT_MINI
MOMENTARY
3439
S3:1
S3:2
C41 and C43 are placed to prevent S1 and P1 from tilting.
C41
C43
47U
35V
6x6mm
Control PCB
ASSEMBLY NOTES
Assembly.SchDoc
DESIGN HISTORY
History.SchDoc
EC1
Yorkville
Yorkville Sound Ltd.
550 Granite Court
Pickering, ON
Canada L1W 3Y8
www.yorkville.com
Product(s): RM5(CE)
Description: Powered Studio Monitor
PCB#: M1705-M1203
Rev#: V03
EML Rev#: 01
Sheet 1 Of 10
Modified: 2018-07-30
File: Top Sheet.SchDoc
Tmp Rev: V031

PANEL PARTS

CNR1 CNR2 CNR3 CNR4 **Corners**

Panel Fiducials

TLH2 TLH3 TLH4 TLH1 TLH5 **Tooling Holes**

BRK2

CRG1 **Clinch Origin**

M1203 *RM5CE*

BEC LOC

INS2 **Insert Origin**

VCD 2nd HOLE

PCB Title

HC3 0

CON_HOLE_125

Step & Repeat: X1@1.234Y1@123.4

1

1.234

1

123.4

HW22 HW12 HW10 HW21

Room1
FinePitchU8

Room2
FinePitchU10

Room4
IgnoreAC_1

TH1 TH2

DOCUMENTATION

PCB **Blank PCB**

AI-ASSY **AI Sub-Assembly**

HW23
HW24
HW25

2335

Room3
IgnoreAC

See PcbDoc for default clearance rules.
Note: You must define your own rules for -HI and +HI.

Yorkville	Section: **ECAD Incidentals**			
	Product(s): **RM5(CE)**			
	PCB#: M1705-M1203	Rev#: V03	EML Rev#: 01	Sheet 1 Of 10
	Modified: 2018-07-30	File: ECO.SchDoc		Tmp Rev: V031

PCB ASSEMBLY DOCUMENTATION

SPECIAL PRODUCTION NOTES

1. Do not bend transformer leads on T1 YS# 1254.
2. Apply RTV to all tall caps and appropriate areas.
3. Use pizza cutter where possible to separate pcb from panel.

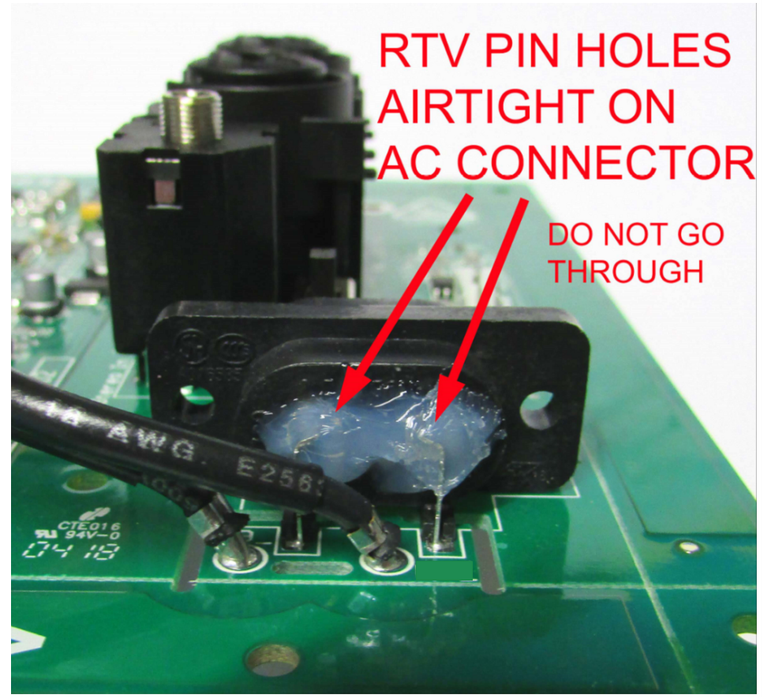

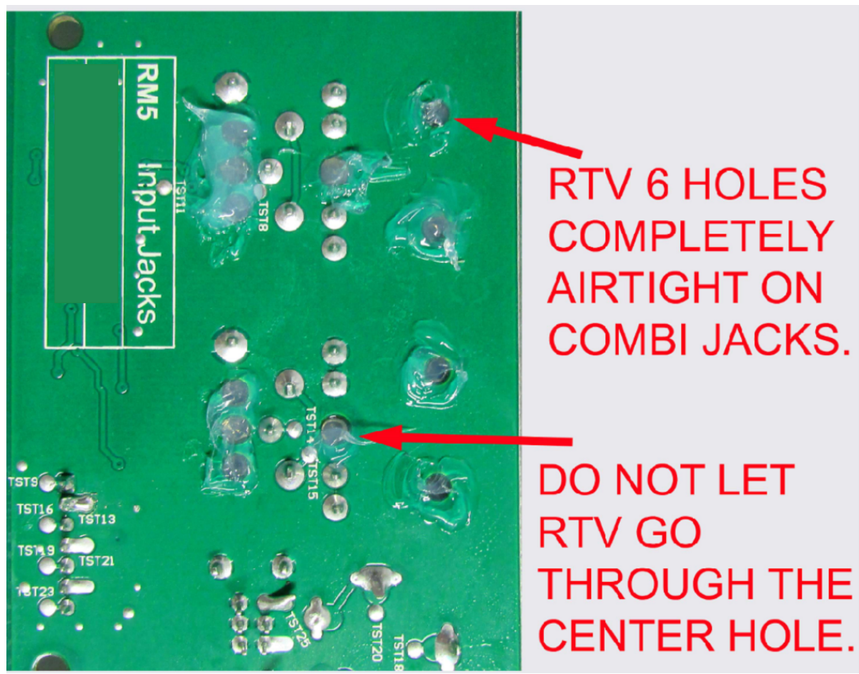

PCB HARDWARE

SCREWS AND BOLTS	NUTS	STANDOFFS	MISCELLANEOUS

POTENTIOMETERS AND KNOBS

POTENTIOMETERS/SWITCHES AND KNOBS

REF	FUNCTION	POT/SW YS#	STYLE	KNOB#
P1	LEVEL	4453	P40	9086
S1	MODE	4200	ROT3	9086
S2	On/Off	3522	.	9089
S3	BT Mode	3439	.	9088
.	.	.	.	.
.	.	.	.	.
.	.	.	.	.
.	.	.	.	.
.	.	.	.	.
.	.	.	.	.
.	.	.	.	.
.	.	.	.	.
.	.	.	.	.
.	.	.	.	.

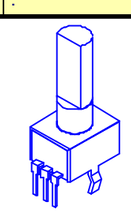

9089

9088

THIS SHEET CONTAINS SPECIAL PRODUCTION NOTES AND A LIST OF PCB HARDWARE PARTS REQUIRED FOR THE BUILD.

Yorkville	Section: Assembly Documentation			
	Product(s): RM5(CE)	M1203-RM5CE		
	PCB#: M1705-M1203	Rev#: V03	EML Rev#: 01	Sheet 1 Of 10
	Modified: 2018-07-30	File: Assembly.SchDoc		Tmp Rev: V031

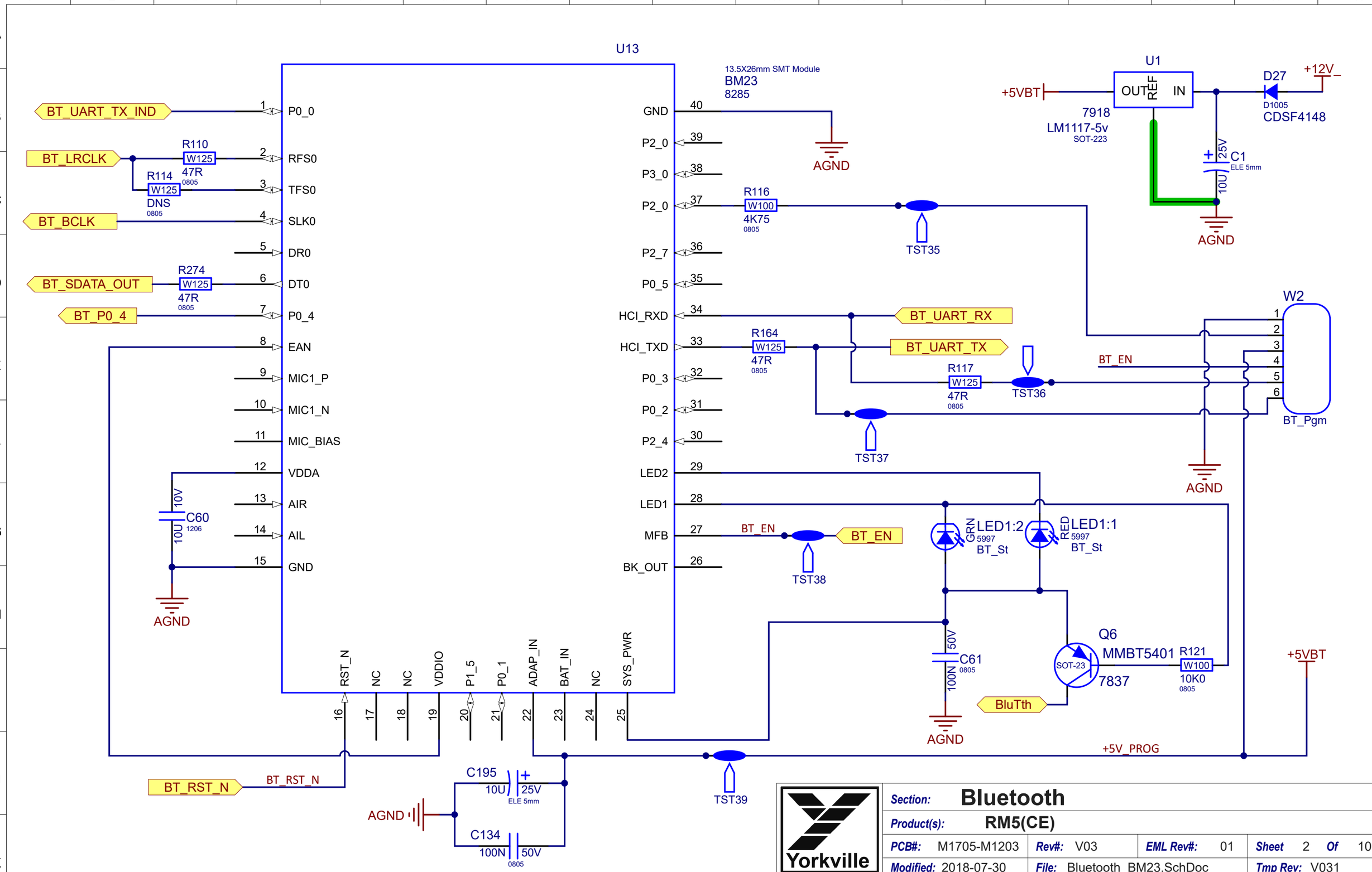
U13
13.5X26mm SMT Module
BM23
8285
U1
7918
LM1117-5v
SOT-223
+5VBT
OUT
REF
IN
D27
D1005
CDSF4148
+12V
C1
ELE 5mm
25V
10U
AGND
BT_UART_TX_IND
BT_LRCLK
BT_BCLK
BT_SDATA_OUT
BT_P0_4
R110
W125
47R
0805
R114
DNS
R274
P0_0
RFS0
TFS0
SLK0
DR0
DT0
P0_4
EAN
MIC1_P
MIC1_N
MIC_BIAS
VDDA
AIR
AIL
GND
C60
1206
10V
10U
GND
P2_0
P3_0
P2_7
P0_5
HCI_RXD
HCI_TXD
P0_3
P0_2
P2_4
LED2
LED1
MFB
BK_OUT
R116
W100
4K75
TST35
BT_UART_RX
BT_UART_TX
R164
47R
R117
TST36
TST37
BT_EN
W2
BT_Pgm
LED1:2
GRN
5997
BT_St
LED1:1
RED
TST38
Q6
MMBT5401
SOT-23
7837
R121
10K0
BluTth
C61
50V
100N
+5VBT
RST_N
NC
VDDIO
P1_5
P0_1
ADAP_IN
BAT_IN
SYS_PWR
+5V_PROG
BT_RST_N
C195
C134
TST39
Yorkville
Section: Bluetooth
Product(s): RM5(CE)
PCB#: M1705-M1203
Rev#: V03
EML Rev#: 01
Sheet 2 Of 10
Modified: 2018-07-30
File: Bluetooth_BM23.SchDoc
Tmp Rev: V031

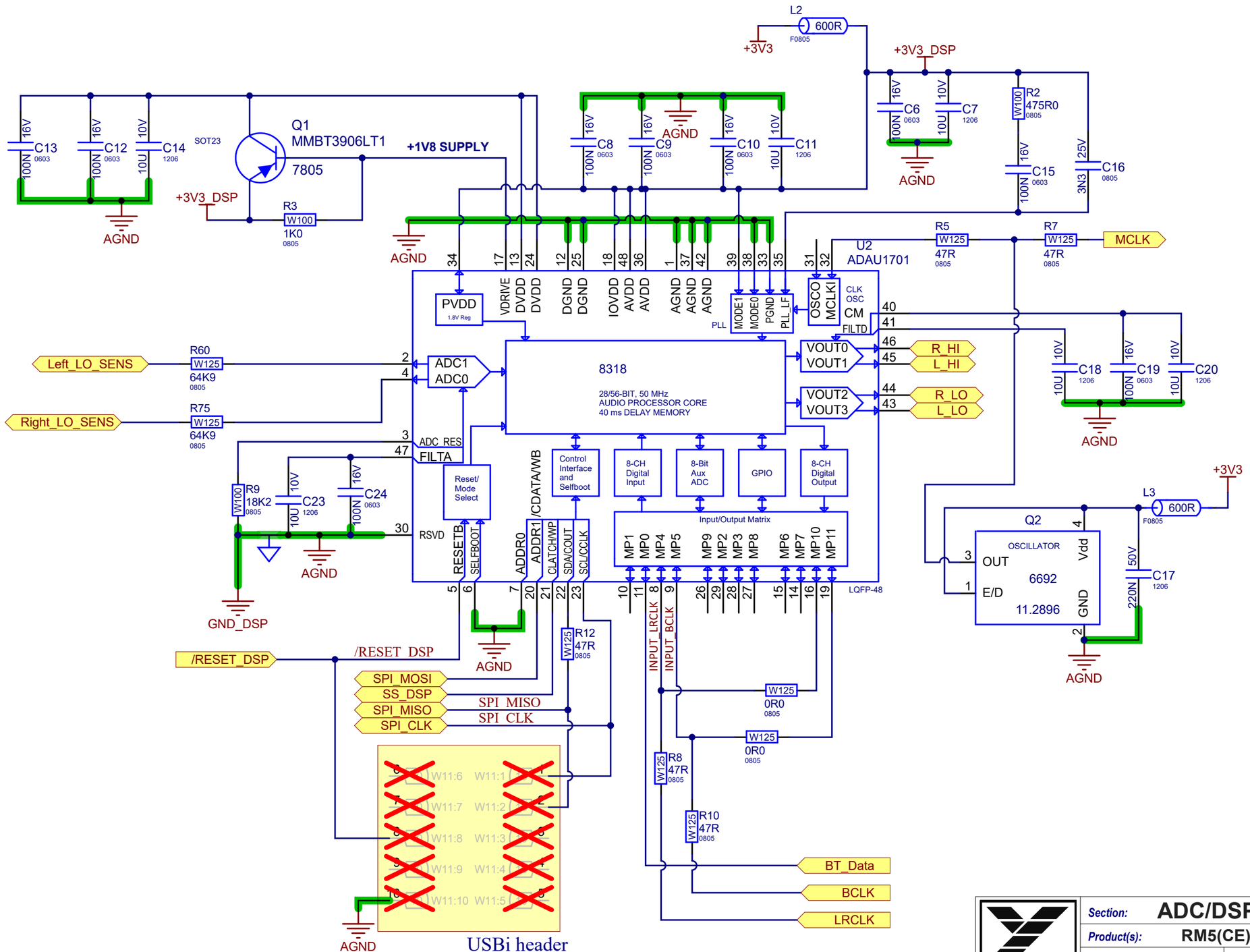

Section:	ADC/DSP		
Product(s):	RM5(CE)		
PCB#: M1705-M1203	Rev#: V03	EML Rev#: 01	Sheet 3 Of 10
Modified: 2018-07-30	File: DSP.SCHDOC		Tmp Rev: V031

Yorkville

Microcontroller

10-Pin Cortex Debug Connector		6-Pin TC2030 Footprint
1 VCC	2 SWDIO / TMS	1 VCC
3 GND	4 SWCLK / TCK	2 SWDIO / TMS
5 GND	6 SWO / TDO	3 nRESET
7 NC / RTCK	8 NC / TDI	4 SWCLK / TCK
9 GNDDetect	10 nRESET	5 GND (also connected to GNDDetect)
		6 SWO / TDO

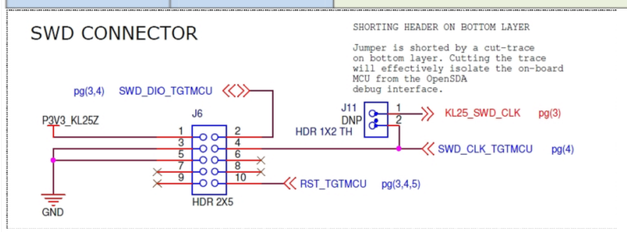

Momentarily connecting N4 to DGND will zero the timout clock and set the sleep timeout to 2 sec. The sleep timeout will remain 2 seconds until the power switch is cycled. It will then revert to 30 minutes.

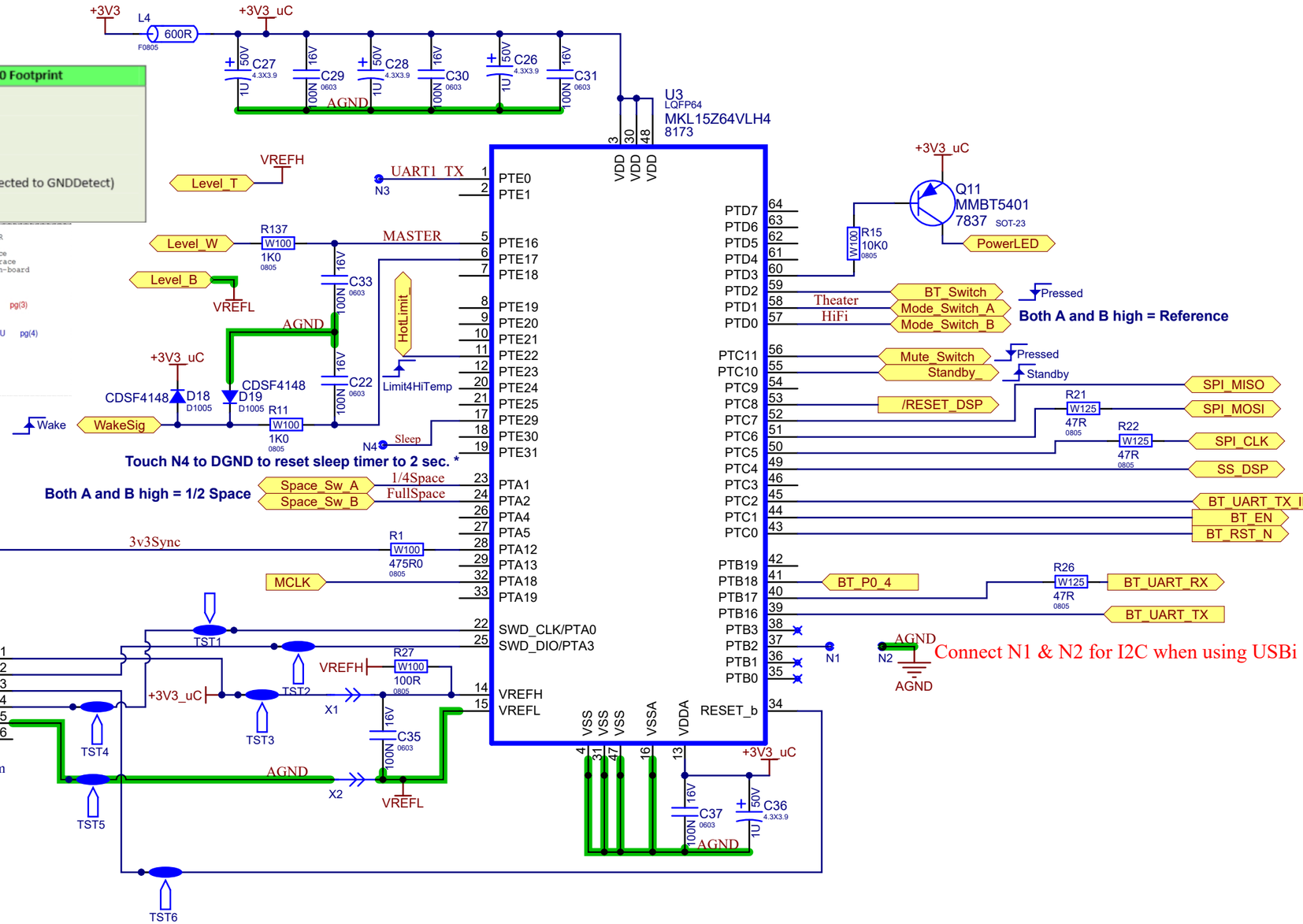

Section:	Microcontroller		
Product(s):	RM5(CE)		
PCB#: M1705-M1203	Rev#: V03	EML Rev#: 01	Sheet 4 Of 10
Modified: 2018-07-30	File: Microcontroller.SchDoc		Tmp Rev: V031

Yorkville

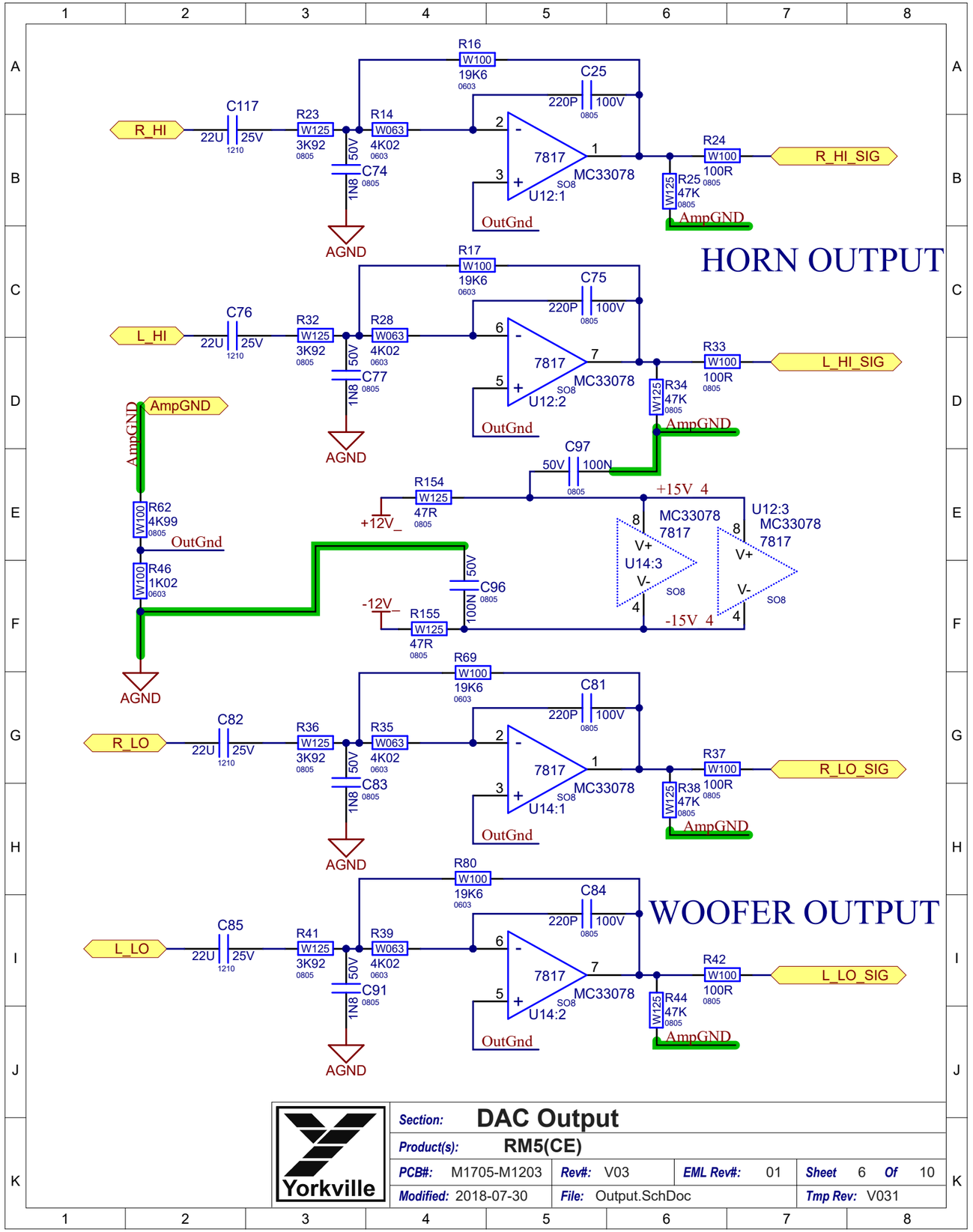

Section:	DAC Output		
Product(s):	RM5(CE)		
PCB#: M1705-M1203	Rev#: V03	EML Rev#: 01	Sheet 6 Of 10
Modified: 2018-07-30	File: Output.SchDoc		Tmp Rev: V031

Yorkville

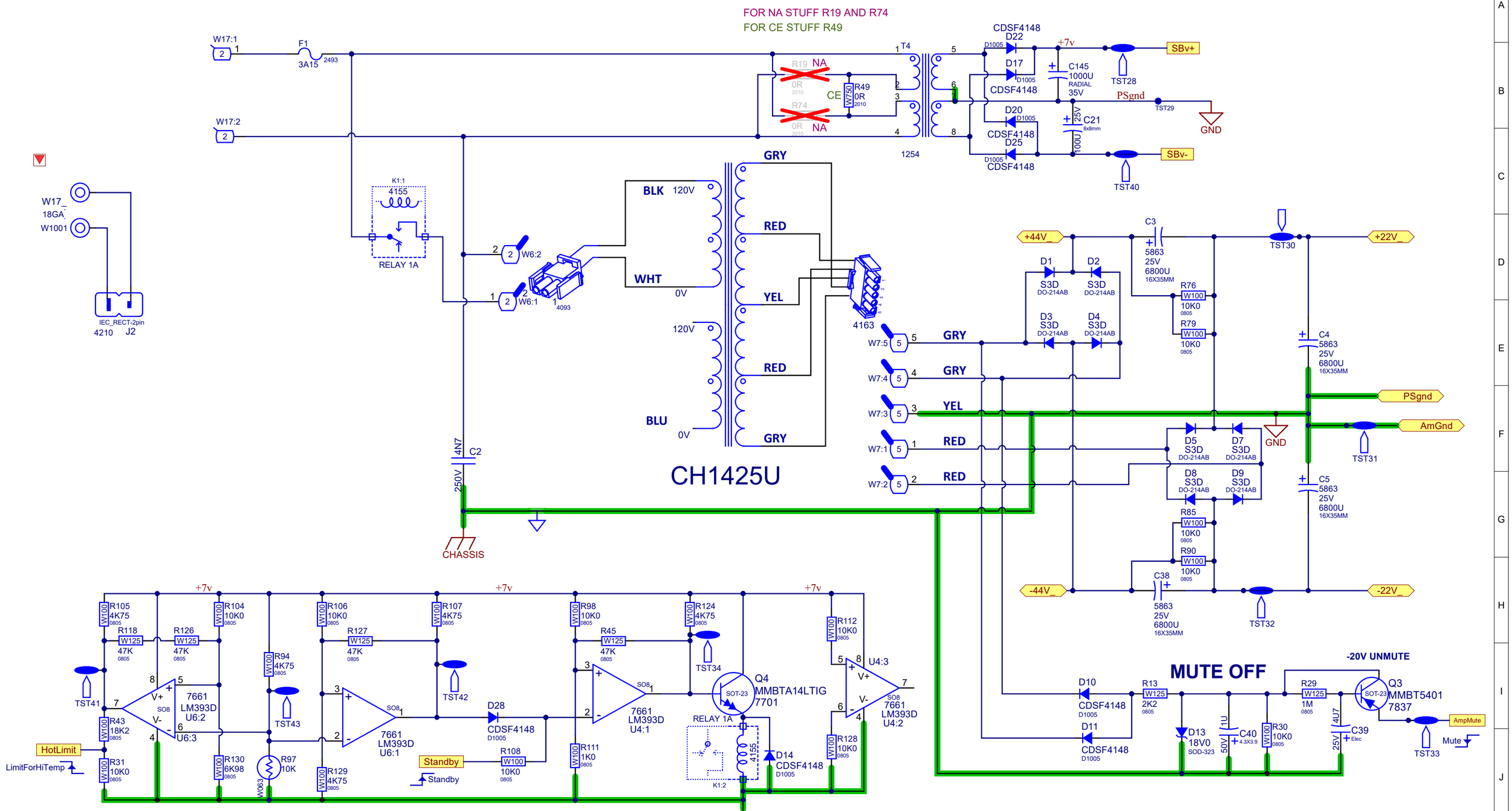

Section:	Power Supply
Product(s):	RM5(CE)
PCB#: M1705-M1203	Rev#: V03 · EML Rev#: 01 · Sheet 7 Of 10
Modified: 2018-07-30	File: PowerSupply.SchDoc · Tmp Rev: V031

Yorkville

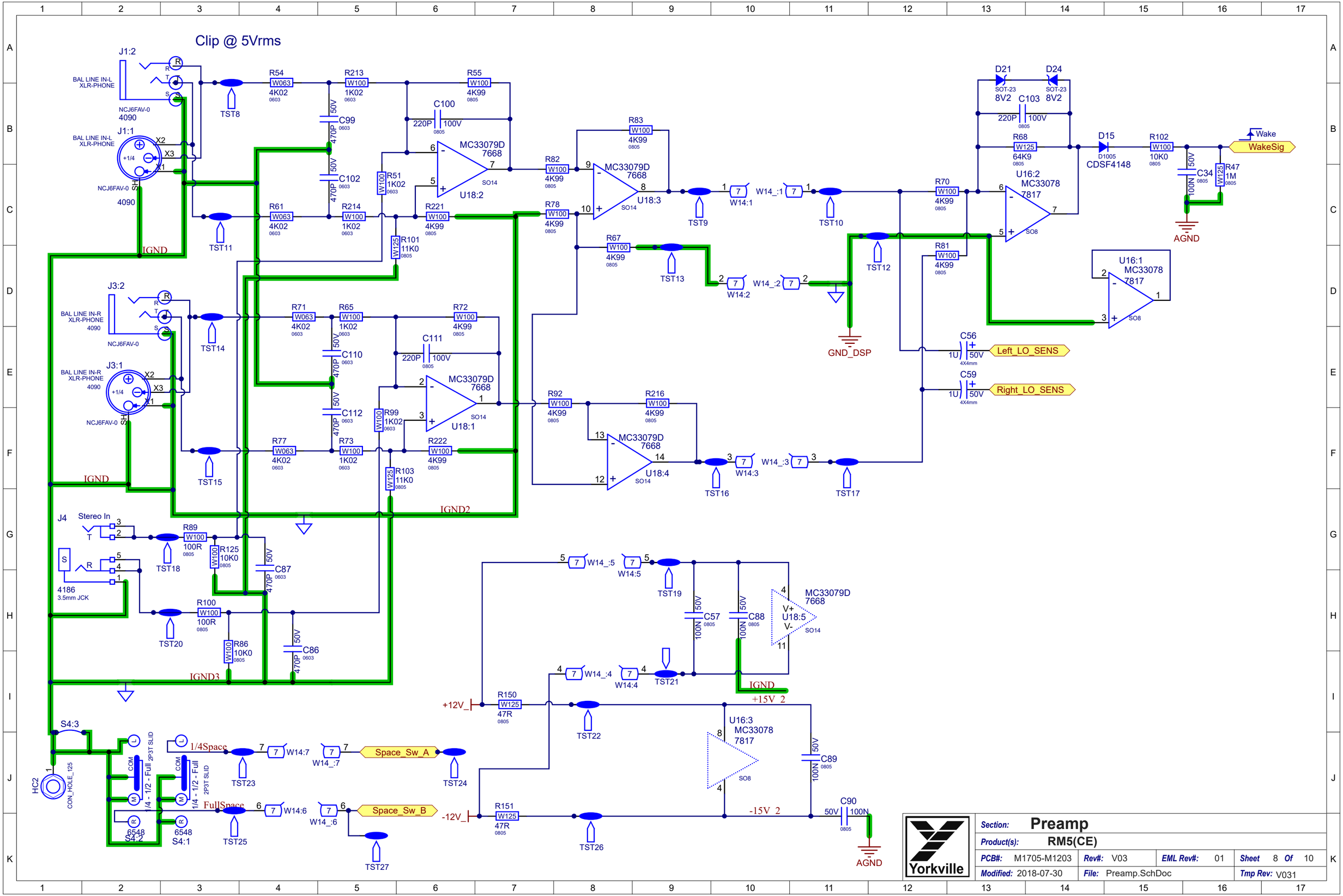
Clip @ 5Vrms
J1:2
BAL LINE IN-L XLR-PHONE
NCJ6FAV-0
4090
J1:1
BAL LINE IN-L XLR-PHONE
NCJ6FAV-0
4090
J3:2
BAL LINE IN-R XLR-PHONE
4090
NCJ6FAV-0
J3:1
BAL LINE IN-R XLR-PHONE
4090
NCJ6FAV-0
J4
Stereo In
4186
3.5mm JCK
IGND
IGND2
IGND3
AGND
GND_DSP
MC33079D
7668
U18:1
U18:2
U18:3
U18:4
U18:5
U16:1
U16:2
U16:3
MC33078
7817
SO14
SO8
D21
D24
SOT-23
8V2
D15
D1005
CDSF4148
Wake
WakeSig
Left_LO_SENS
Right_LO_SENS
Space_Sw_A
Space_Sw_B
1/4Space
FullSpace
S4:3
S4:2
S4:1
6548
1/4 - 1/2 - Full
2P3T SLID
HC2
CON_HOLE_125
+12V_
-12V_
+15V 2
-15V 2
Section: Preamp
Product(s): RM5(CE)
PCB#: M1705-M1203
Rev#: V03
EML Rev#: 01
Sheet 8 Of 10
Modified: 2018-07-30
File: Preamp.SchDoc
Tmp Rev: V031
Yorkville

DESIGN HISTORY AND INFORMATION

CHANGE HISTORY

DATE	VER	PC#	DESCRIPTION
07-APR-2017	V01		RELEASED FOR PRODUCTION
12-JUN-2018	V02	9242	Update layout PDF part numbers for C3, C4, C5 and C38 to YS#5863
27-JUL-2018	V03	9172 9175 9208 9226	Remove HW18, HW19. Change HW17 and HW20 to 0.125" holes. Added more marker jumpers to hide the board number that is not needed. Change J4 to hand inserted. Mark J4 to not be clinched. Add 9087 switch cap to S4 in PCBSA Flip phase of the right woofer-Swap pins 1&2 @W13. Requires V03 micro firmware. Change AC in wires at PS PCB to 4225 connector.

THIS SHEET CONTAINS A CHANGE HISTORY LOG, A LIST OF THE POTS & KNOBS AND A LEADS & PINS REFERENCE SECTION.

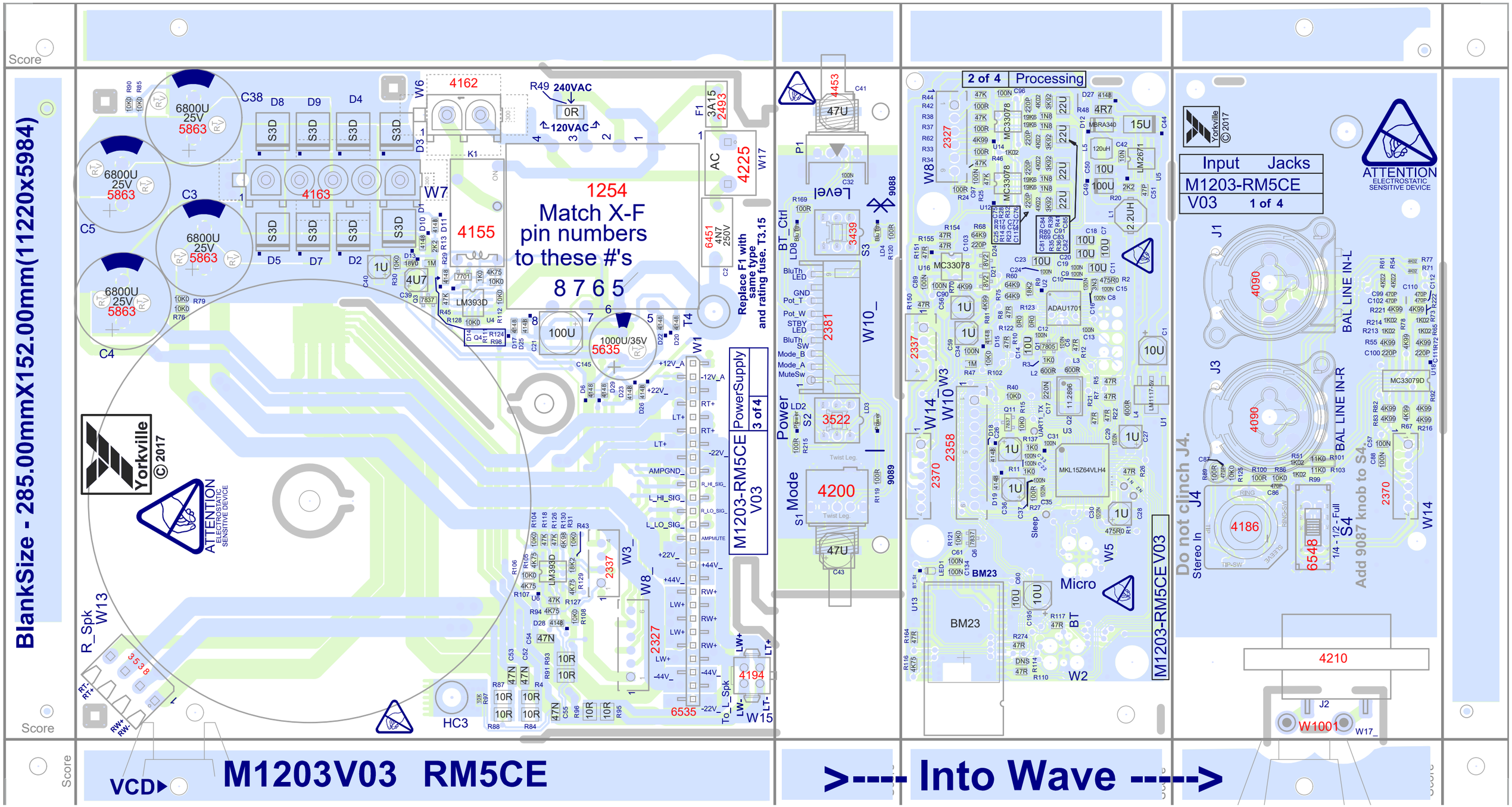
BlankSize - 285.00mmX152.00mm(11220x5984)
Score
1254
Match X-F
pin numbers
to these #'s
8 7 6 5
Replace F1 with
same type
and rating fuse. T3.15
PowerSupply
3 of 4
M1203-RM5CE
V03
2 of 4
Processing
Input Jacks
M1203-RM5CE
V03
1 of 4
ATTENTION
ELECTROSTATIC
SENSITIVE DEVICE
Yorkville
© 2017
Do not clinch J4.
Stereo In
Add 9087 knob to S4.
1/4 - 1/2 - Full
BAL LINE IN-L
BAL LINE IN-R
Micro
BT
Sleep
Power
Mode
Level
BT_Ctrl
R_Spk
W13
HC3
VCD
M1203V03 RM5CE
>---- Into Wave ---->
Score

PCB ASSEMBLY DOCUMENTATION

SPECIAL PRODUCTION NOTES

1. Do not bend transformer leads on T1 YS# 1254.
2. Apply RTV to all tall caps and appropriate areas.
3. For North America M1705 stuff R19 and R74.
   For CE M1203 stuff R49 and do not stuff R19 and R74.
4. Use pizza cutter where possible to separate pcb from panel.

PCB HARDWARE

SCREWS AND BOLTS	NUTS	STANDOFFS	MISCELLANEOUS

POTENTIOMETERS AND KNOBS

POTENTIOMETERS/SWITCHES AND KNOBS				
REF	FUNCTION	POT/SW YS#	STYLE	KNOB#
P1	LEVEL	4453	P40	9086
S1	MODE	4200	ROT3	9086
S2	On/Off	3522	.	9089
S3	BT Mode	3439	.	9088
.	.	.	.	.
.	.	.	.	.
.	.	.	.	.
.	.	.	.	.
.	.	.	.	.
.	.	.	.	.
.	.	.	.	.
.	.	.	.	.
.	.	.	.	.

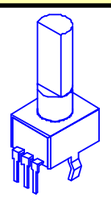

"STYLE_P32"

9089

9088

THIS SHEET CONTAINS SPECIAL PRODUCTION NOTES AND A LIST OF PCB HARDWARE PARTS REQUIRED FOR THE BUILD.

Yorkville	Section: Assembly Documentation			
	Product(s): RM5			
	PCB#: X8009	Rev#: V02	EML Rev#: 01	Sheet 1 Of 9
	Modified: 10-Oct-18	File: Assembly.SchDoc		Tmp Rev: V031

DESIGN HISTORY AND INFORMATION

CHANGE HISTORY

DATE	VER	PC#	DESCRIPTION
07-APR-2017	V01		RELEASED FOR PRODUCTION
12-JUN-2018	V02	9242	Update layout PDF part numbers for C3, C4, C5 and C38 to YS#5863
27-JUL-2018	V03	9172 9175 9208 9226	Remove HW18, HW19. Change HW17 and HW20 to 0.125" holes. Added more marker jumpers to hide the board number that is not needed. Change J4 to hand inserted. Mark J4 to not be clinched. Add 9087 switch cap to S4 in PCBSA Flip phase of the right woofer-Swap pins 1&2 @W13. Requires V03 micro firmware. Change AC in wires at PS PCB to 4225 connector.

THIS SHEET CONTAINS A CHANGE HISTORY LOG, A LIST OF THE POTS & KNOBS AND A LEADS & PINS REFERENCE SECTION.

RM5 Amplifier - Top Sheet

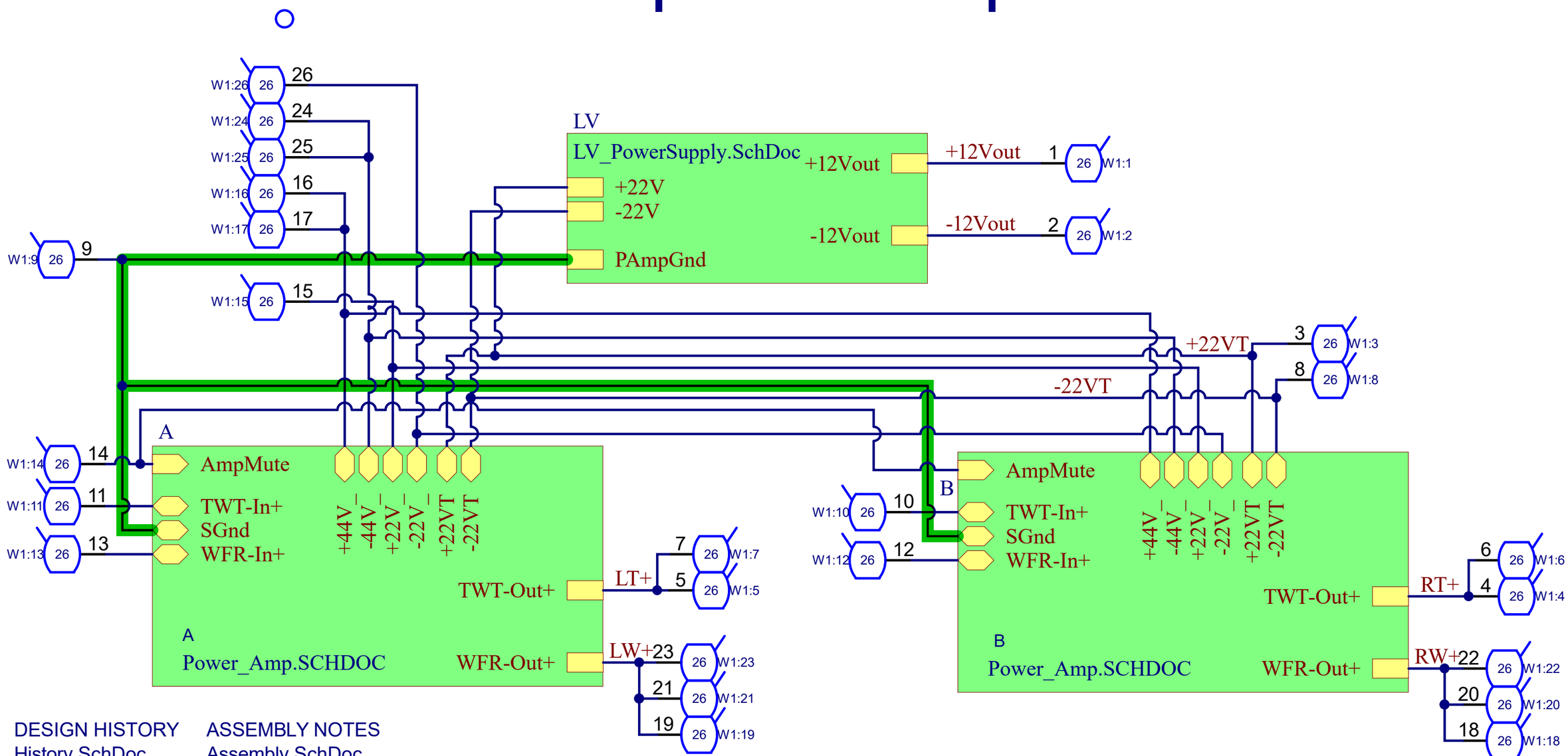

DESIGN HISTORY
History.SchDoc

ASSEMBLY NOTES
Assembly.SchDoc

Yorkville

Yorkville Sound Ltd.
550 Granite Court
Pickering, ON
Canada L1W 3Y8
www.yorkville.com

Product(s):	RM5		
Description:	Powered Studio Monitor		
PCB#: M1494	Rev#: V02	EML Rev#: 01	Sheet 1 Of 6
Modified: 2018-02-06	File: Top Sheet.SchDoc		Tmp Rev: V031

LV Power Supply

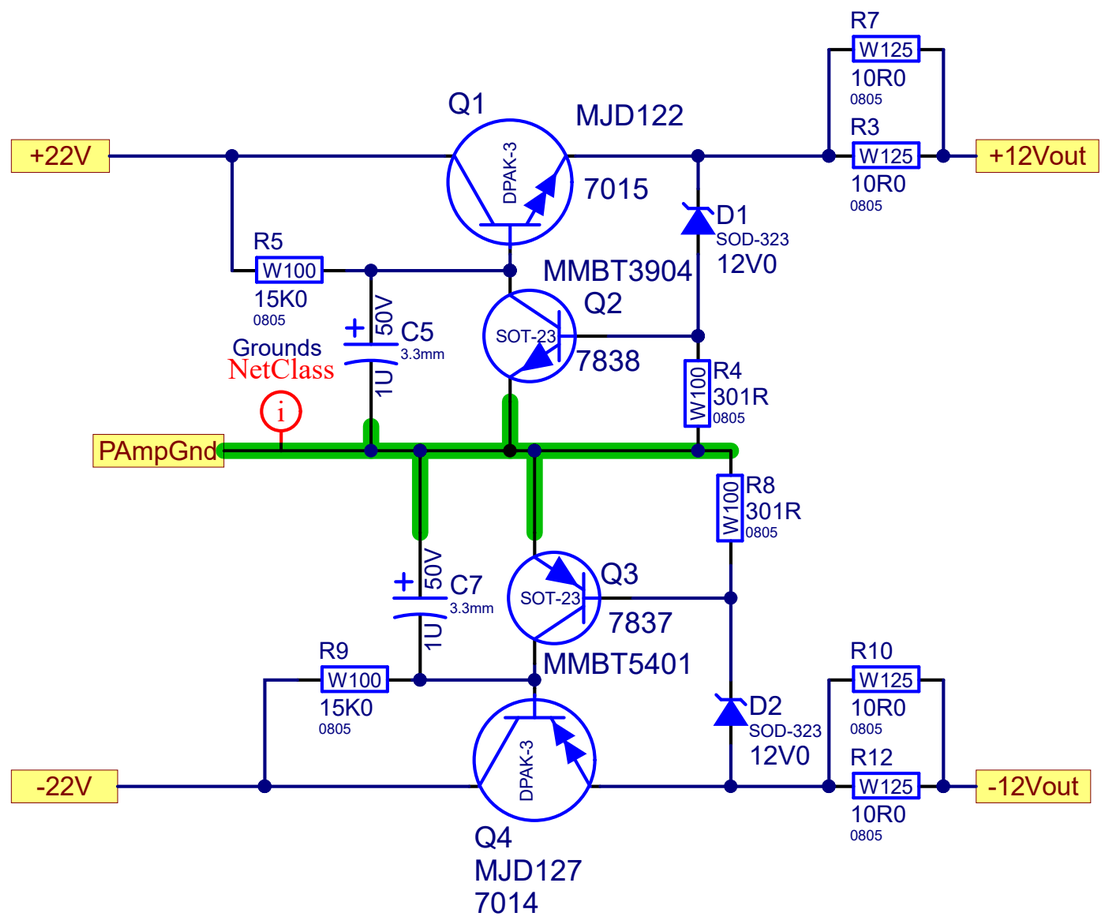

Section: **LV Power Supply**			
Product(s): **RM5**			
PCB#: M1494	Rev#: V02	EML Rev#: 01	Sheet 1 Of 6
Modified: 2018-02-06	File: LV_PowerSupply.SchDoc		Tmp Rev: V031

Yorkville

Power Amp
Ch Amps

Tweeter Amp

Horn Bias Set to 1.5mV
Between TP1Ch and TP2Ch

TWT-In+ — TWT-In+ — R114 W100 0805 301R — C4 10U 16V Elec — R102 W125 0805 30K0 — R64 W100 2K74 — U8:2 SO8 MC33078

MMBF4391LT1 Q24 SOT-23 7806 — R119 W125 5K76 0805 — R118 W125 2K2 — C52 1N 50V — C53 27P 50V — C60 10U 16V Elec — R153 W100 15K0 — R166 W100 1K0 — C62 100P 50V — SGND

SGnd — SGND

R45 W125 47R — D24 250V SOT-23 — +22VT

P2 B 10K Bias 4512 — R116 W125 30K0 0805 — R144 W125 49K9 0805 — R143 W125 470R

MMBTA64 8022 Q23 SOT-23 — 50V 100N C49 0805 — SGND

R98 W125 10R0 — R99 W333 33R — C3 1N 0805 50V — C50 1N 0805 50V — U8:3 SO8 MC33078 — R145 W125 10R0 — R146 W333 33R — R156 W100 15K0

D30 CDSF4148 D1005 — U8:1 SO8 MC33078 — R197 W125 47R — D32 250V SOT-23

R46 W250 1206 330R — R47 W250 1206 330R — R48 W125 47R — C2 5N6 50V — Q21 MJD122 7015 DPAK-3 — Designator TP1 — R115 1W00 0R047 2512 — C38 25V 100U ELE 8mm — C51 25V 100U ELE 8mm — ZD1 12V0 SOD-323 — ZD2 12V0 SOD-323 — C59 5N6 50V — R162 W125 47R — R141 1W00 0R047 2512 — TP2 — Q25 MJD127 7014 DPAK-3 — R190 W250 1206 330R — R196 W250 1206 330R — TWT-Out+ — -22VT

Woofer Amp

Woofer Bias Set to 1.5mV
Between TP3Ch and TP4Ch

AmpMute — AmpMute

WFR-In+ — WFR-In+ — R11 W125 0805 10R0 — C64 10U 16V Elec — R226 W125 0805 5K76 — R227 W125 0805 30K0 — R224 W100 2K74 — U23:2 SO8 MC33078

Q30 SOT-23 7806 MMBF4391LT1 — R232 W125 5K76 0805 — R231 W125 2K2 — C68 1N 50V — C69 47P 100V — C71 10U 16V Elec — R240 W100 15K0 — R246 W100 1K0 — C95 330P 50V — SGND

C1 5N6 0805 50V — R230 W125 47R — C67 100N 0805 50V

P3 B 10K Bias 4512 — R235 W125 30K0 0805 — R242 W125 49K9 0805 — R243 W125 470R

MMBTA64 8022 Q29 SOT-23 — SGND

R228 W125 10R0 — R229 W333 33R — C65 1N 0805 50V — C70 1N 0805 50V — U23:3 SO8 MC33078 — R244 W125 10R0 — R245 W333 33R — R248 W100 15K0

D38 CDSF4148 D1005 — U23:1 SO8 MC33078 — R249 W125 47R — D42 250V SOT-23

D33 250V SOT-23 — +44V

R199 W250 1206 330R — R200 W250 1206 330R — R223 W100 100R — D34 250V SOT-23 — R1 W125 47R — R225 W125 47R — Q27 MJD122 7015 DPAK-3 — TP3 — R233 1W00 0R047 2512 — C66 25V 100U ELE 8mm — C72 25V 100U ELE 8mm — ZD4 12V0 SOD-323 — ZD5 15V0 SOD-323 — R236 1W00 0R047 2512 — MJD127 7014 DPAK-3 — TP4 Q31 — R247 W125 47R — R2 W125 47R — SOT-23 D41 250V — R250 W250 1206 330R — R251 W250 1206 330R — R252 W100 100R — ZD6 15V0 SOD-323 — D42 250V SOT-23

ZD3 15V0 SOD-323 — C6 50V 1N 0805 — R13 W125 33R 0805 — Q26 IRF530NS 7840 D2PAK — +44V_

D35 MURA240T3 403D — +22V — +22V_ — Q28 MJD122 7015 DPAK-3 — R234 1W00 0R047 2512 — R6 W250 0R — WFR-Out+ — R237 1W00 0R047 2512 — Q32 MJD127 7014 DPAK-3 — D37 MURA240T3 403D — -22V — -22V_ — Q33 IRF9530NS 7839 D2PAK — -44V — -44V_

Yorkville

Section: Power Amp			
Product(s): RM5			
PCB#: M1494	Rev#: V02	EML Rev#: 01	Sheet 2 Of 6
Modified: 2018-02-06	File: Power_Amp.SCHDOC		Tmp Rev: V031

DESIGN HISTORY AND INFORMATION

CHANGE HISTORY

#	DATE	VER#	PC#	DESCRIPTION OF CHANGE
1	13-APR-2017	V01	.	RELEASED V01
2	22-JAN-2018	.	9151	FOR DETAILS SEE PC AND ASSEMBLY PAGE
3	06-FEB-2018	V02	9151	PC IMPLEMENTED ON BOARD
4	.	.	.	.
5	.	.	.	.
6	.	.	.	.
7	.	.	.	.
8	.	.	.	.
9	.	.	.	.
10	.	.	.	.
11	.	.	.	.
12	.	.	.	.
13	.	.	.	.

#	DATE	VER#	PC#	DESCRIPTION OF CHANGE
1	.	.	.	.
2	.	.	.	.
3	.	.	.	.
4	.	.	.	.
5	.	.	.	.
6	.	.	.	.
7	.	.	.	.
8	.	.	.	.
9	.	.	.	.
10	.	.	.	.
11	.	.	.	.
12	.	.	.	.
13	.	.	.	.

#	DATE	VER#	PC#	DESCRIPTION OF CHANGE
1	.	.	.	.
2	.	.	.	.
3	.	.	.	.
4	.	.	.	.
5	.	.	.	.
6	.	.	.	.
7	.	.	.	.
8	.	.	.	.
9	.	.	.	.
10	.	.	.	.
11	.	.	.	.
12	.	.	.	.
13	.	.	.	.

POTENTIOMETERS AND KNOBS

POTENTIOMETERS/SWITCHES AND KNOBS				
REF	FUNCTION	POT/SW YS#	STYLE	KNOB#

THIS SHEET CONTAINS A CHANGE HISTORY LOG, A LIST OF THE POTS & KNOBS AND A LEADS & PINS REFERENCE SECTION.

Yorkville

Section:	Design Information And History		
Product(s):	RM5		
PCB#: M1494	Rev#: V02	EML Rev#: 01	Sheet 1 Of 6
Modified: 2018-02-07	File: History.SchDoc		Tmp Rev: V031

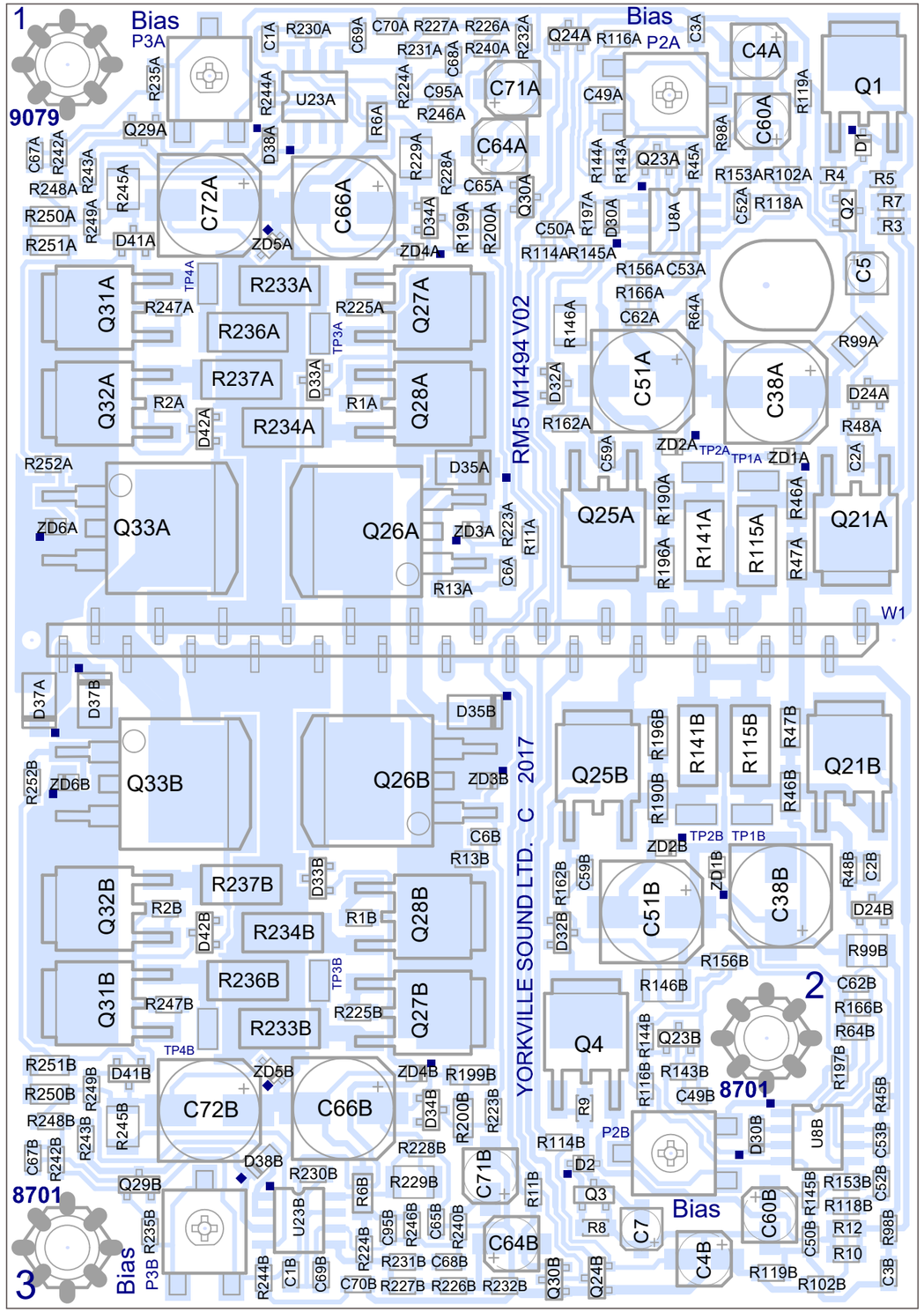

DESIGNATORS

M1494 V02 RM5

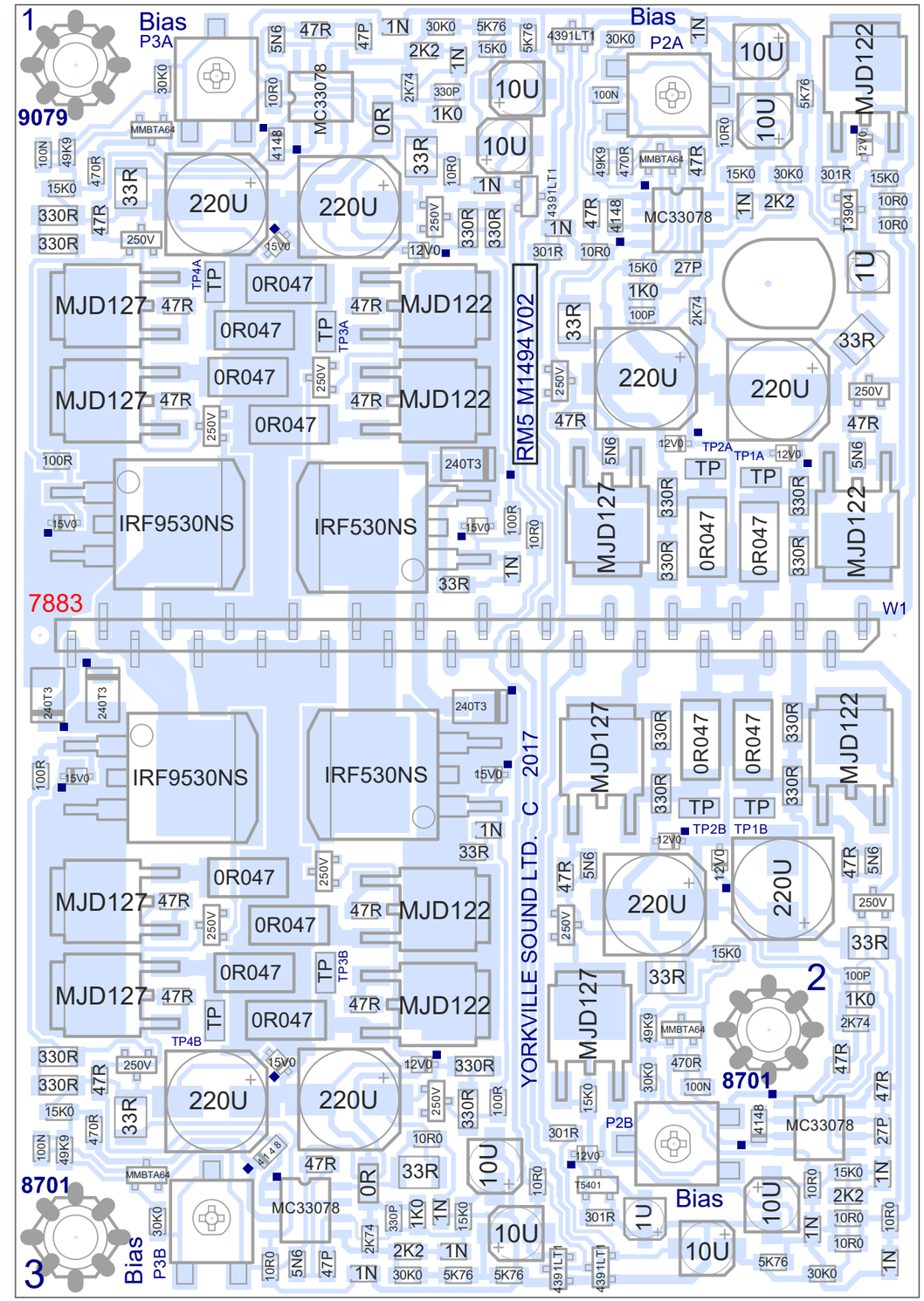

VALUES

PCB ASSEMBLY DOCUMENTATION

SPECIAL PRODUCTION NOTES

1. HAND PLACE CONNECTOR W1 (#7883) BEFORE THE REFLOW OVEN.
2. USE PIZZA CUTTER TO SEPERATE BOARDS FROM PANEL.

PCB HARDWARE

SCREWS AND BOLTS	NUTS	STANDOFFS	MISCELLANEOUS

DOCUMENTATION

PCB

Blank PCB

AI-ASSY

AI Sub-Assembly

THIS SHEET CONTAINS SPECIAL PRODUCTION NOTES AND A LIST OF PCB HARDWARE PARTS REQUIRED FOR THE BUILD.

Yorkville	Section: Assembly Documentation		
	Product(s): RM5		
	PCB#: M1494	Rev#: V02	EML Rev#: 01	Sheet 1 Of 6
	Modified: 2018-02-26	File: Assembly.SchDoc	Tmp Rev: V031

DESIGN HISTORY AND INFORMATION

CHANGE HISTORY

#	DATE	VER#	PC#	DESCRIPTION OF CHANGE
1	13-APR-2017	V01	.	RELEASED V01
2	22-JAN-2018	.	9151	FOR DETAILS SEE PC AND ASSEMBLY PAGE
3	06-FEB-2018	V02	9151	PC IMPLEMENTED ON BOARD
4	.	.	.	CHANGE YS#7811 ON C38A, C51A, C66A, C72A,
5	26-FEB-2018	.	9171	C38B, C51B, C66B, C72B WITH YS#8510
6	.	.	.	.
7	.	.	.	.
8	.	.	.	.
9	.	.	.	.
10	.	.	.	.
11	.	.	.	.
12	.	.	.	.
13	.	.	.	.
#	DATE	VER#	PC#	DESCRIPTION OF CHANGE
1	.	.	.	.
2	.	.	.	.
3	.	.	.	.
4	.	.	.	.
5	.	.	.	.
6	.	.	.	.
7	.	.	.	.
8	.	.	.	.
9	.	.	.	.
10	.	.	.	.
11	.	.	.	.
12	.	.	.	.
13	.	.	.	.
#	DATE	VER#	PC#	DESCRIPTION OF CHANGE
1	.	.	.	.
2	.	.	.	.
3	.	.	.	.
4	.	.	.	.
5	.	.	.	.
6	.	.	.	.
7	.	.	.	.
8	.	.	.	.
9	.	.	.	.
10	.	.	.	.
11	.	.	.	.
12	.	.	.	.
13	.	.	.	.

POTENTIOMETERS AND KNOBS

POTENTIOMETERS/SWITCHES AND KNOBS				
REF	FUNCTION	POT/SW YS#	STYLE	KNOB#

THIS SHEET CONTAINS A CHANGE HISTORY LOG, A LIST OF THE POTS & KNOBS AND A LEADS & PINS REFERENCE SECTION.

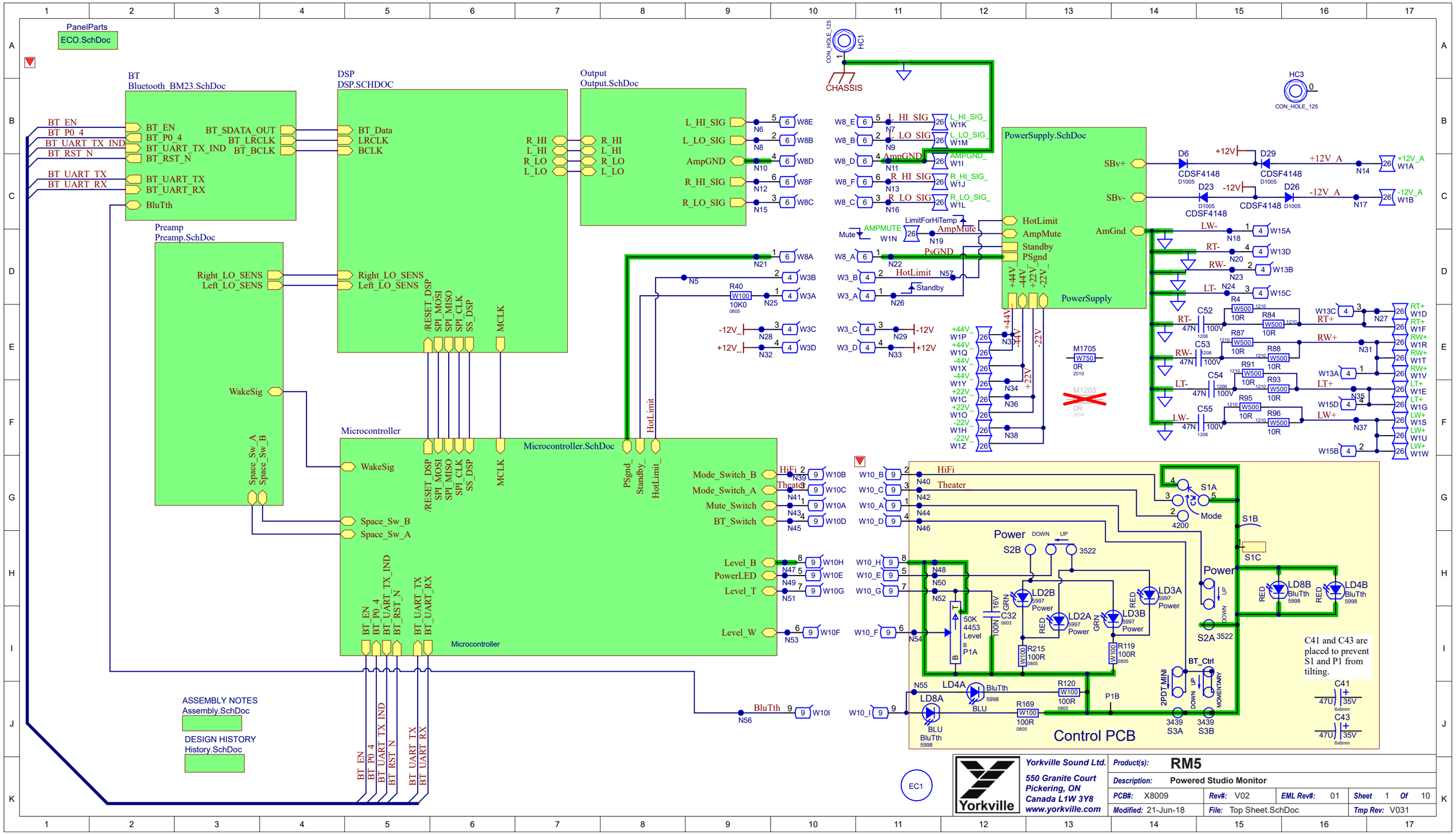
PanelParts
ECO.SchDoc
BT
Bluetooth_BM23.SchDoc
DSP
DSP.SCHDOC
Output
Output.SchDoc
Preamp
Preamp.SchDoc
Microcontroller
Microcontroller.SchDoc
PowerSupply.SchDoc
PowerSupply
Control PCB
ASSEMBLY NOTES
Assembly.SchDoc
DESIGN HISTORY
History.SchDoc
CHASSIS
C41 and C43 are placed to prevent S1 and P1 from tilting.
Yorkville Sound Ltd.
550 Granite Court
Pickering, ON
Canada L1W 3Y8
www.yorkville.com
Product(s): RM5
Description: Powered Studio Monitor
PCB#: X8009
Rev#: V02
EML Rev#: 01
Sheet 1 Of 10
Modified: 21-Jun-18
File: Top Sheet.SchDoc
Tmp Rev: V031

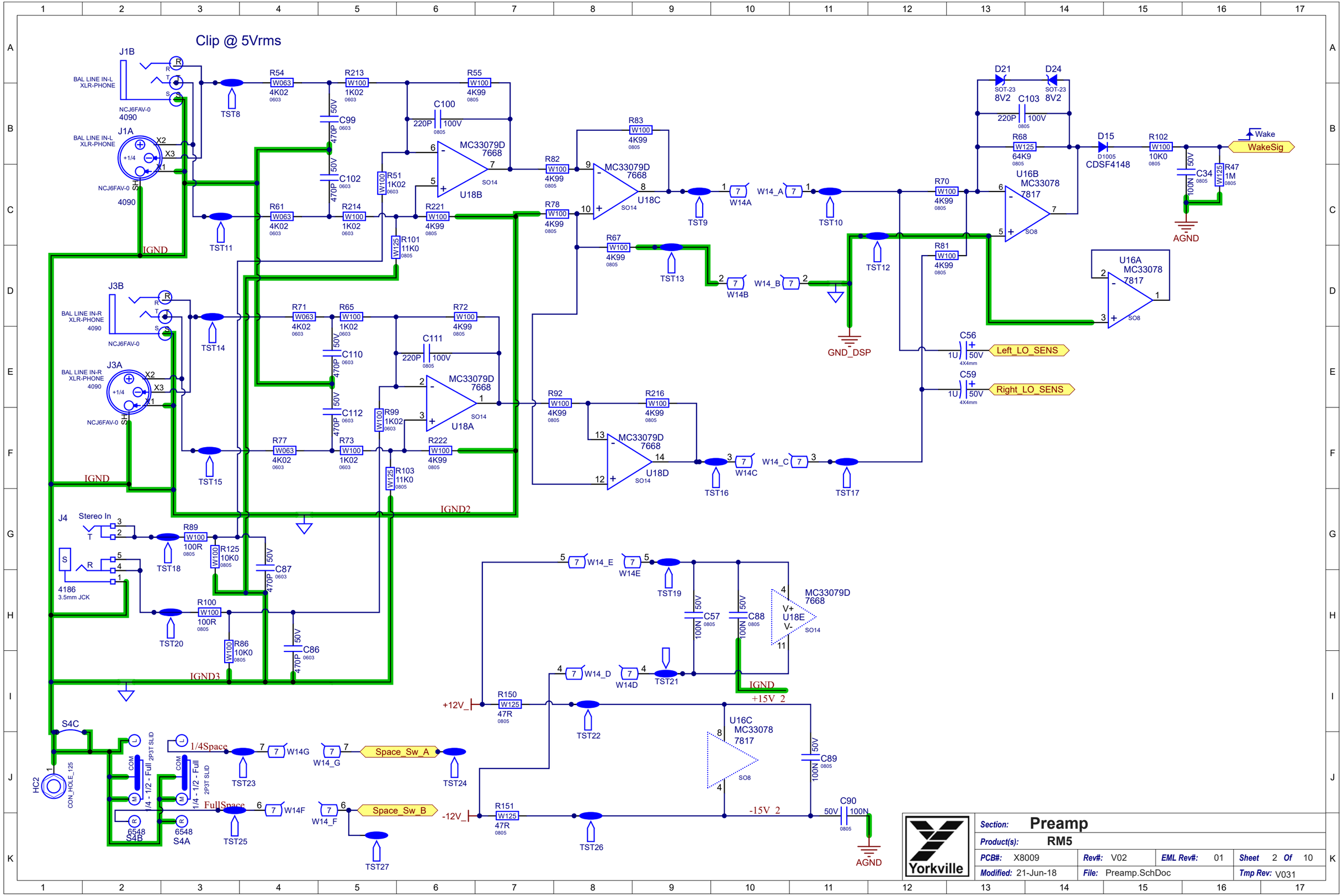
Clip @ 5Vrms
J1B
BAL LINE IN-L
XLR-PHONE
NCJ6FAV-0
4090
J1A
BAL LINE IN-L
XLR-PHONE
NCJ6FAV-0
4090
J3B
BAL LINE IN-R
XLR-PHONE
4090
NCJ6FAV-0
J3A
BAL LINE IN-R
XLR-PHONE
4090
NCJ6FAV-0
J4
Stereo In
4186
3.5mm JCK
IGND
IGND2
IGND3
AGND
GND_DSP
R54 W063 4K02 0603
R213 W100 1K02 0603
R55 W100 4K99 0805
C100 220P 100V 0805
C99 0603 50V 470P
C102 0603 50V 470P
R51 1K02 0603
MC33079D 7668
U18B
SO14
R61 W063 4K02 0603
R214 W100 1K02 0603
R221 W100 4K99 0805
R101 11K0 0805
R82 W100 4K99 0805
R83 W100 4K99 0805
R78 W100 4K99 0805
U18C
R67 W100 4K99 0805
R71 W063 4K02 0603
R65 W100 1K02 0603
R72 W100 4K99 0805
C111 220P 100V 0805
C110 0603 50V 470P
U18A
R99 1K02 0603
C112 0603 50V 470P
R77 W063 4K02 0603
R73 W100 1K02 0603
R222 W100 4K99 0805
R103 11K0 0805
R92 W100 4K99 0805
R216 W100 4K99 0805
U18D
R89 W100 100R 0805
R125 10K0 0805
C87 0603 50V 470P
R100 W100 100R 0805
R86 10K0 0805
C86 0603 50V 470P
TST8
TST11
TST14
TST15
TST18
TST20
TST9
TST13
TST10
TST12
TST16
TST17
W14A
W14B
W14C
W14_A
W14_B
W14_C
D21 SOT-23 8V2
D24 SOT-23 8V2
C103 220P 100V 0805
R68 W125 64K9 0805
U16B MC33078 7817
SO8
D15 D1005 CDSF4148
R102 W100 10K0 0805
C34 0805 50V 100N
R47 W125 1M 0805
Wake
WakeSig
R70 W100 4K99 0805
R81 W100 4K99 0805
U16A MC33078 7817
C56 1U 50V 4X4mm
Left_LO_SENS
C59 1U 50V 4X4mm
Right_LO_SENS
W14E
W14D
TST19
TST21
C57 0805 50V 100N
C88 0805 50V 100N
MC33079D 7668
U18E
SO14
+15V 2
R150 W125 47R 0805
+12V
TST22
U16C MC33078 7817
SO8
C89 0805 50V 100N
-15V 2
C90 0805 50V 100N
R151 W125 47R 0805
-12V
TST26
W14_E
W14_D
W14G
W14_G
W14F
W14_F
Space_Sw_A
Space_Sw_B
TST23
TST24
TST25
TST27
S4C
HC2
CON_HOLE_125
1/4Space
FullSpace
1/4 - 1/2 - Full 2P3T SLID
6548 S4B
6548 S4A
Yorkville
Section: Preamp
Product(s): RM5
PCB#: X8009
Rev#: V02
EML Rev#: 01
Sheet 2 Of 10
Modified: 21-Jun-18
File: Preamp.SchDoc
Tmp Rev: V031

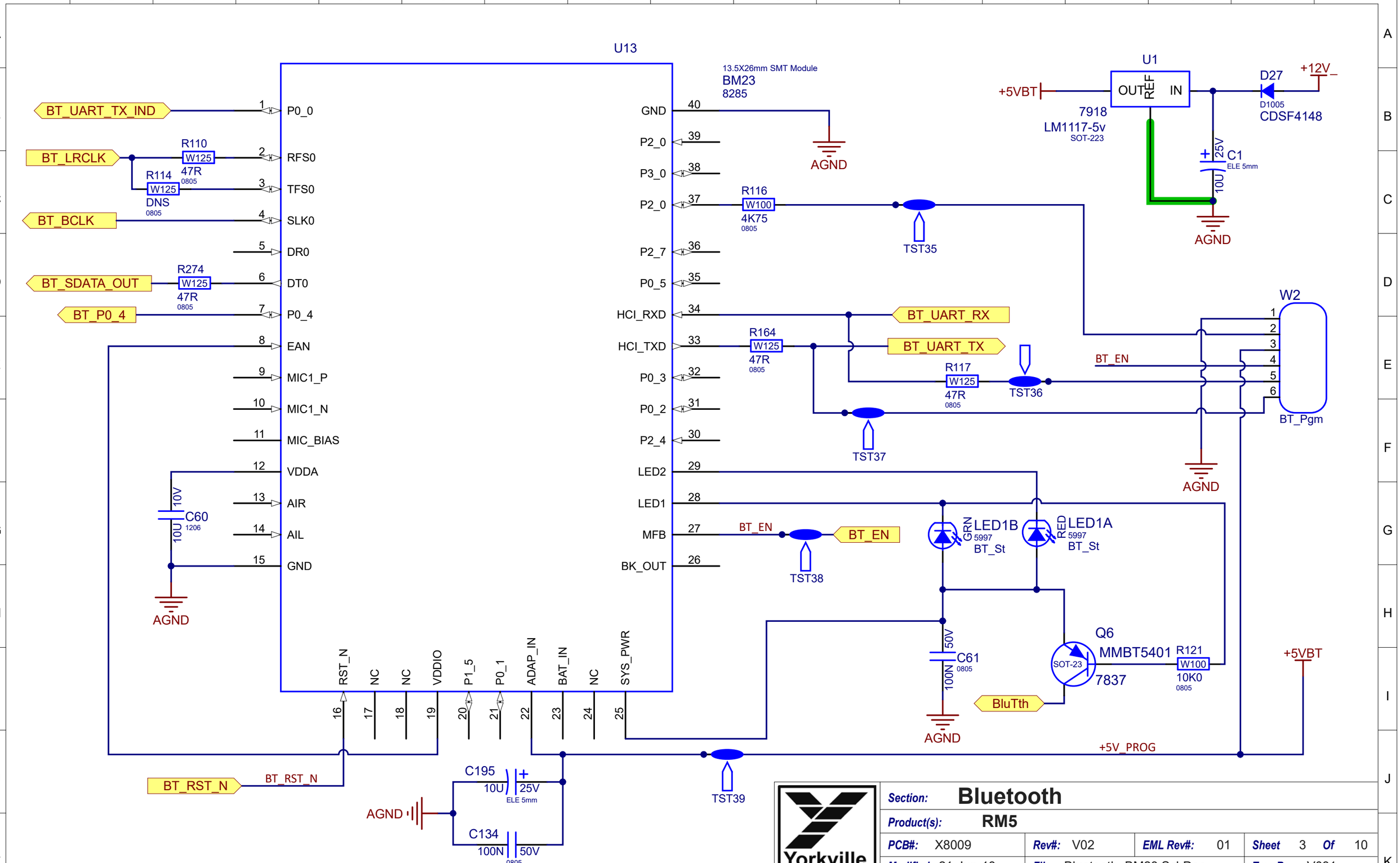

Section: **Bluetooth**			
Product(s): **RM5**			
PCB#: X8009	Rev#: V02	EML Rev#: 01	Sheet 3 Of 10
Modified: 21-Jun-18	File: Bluetooth_BM23.SchDoc		Tmp Rev: V031

Yorkville

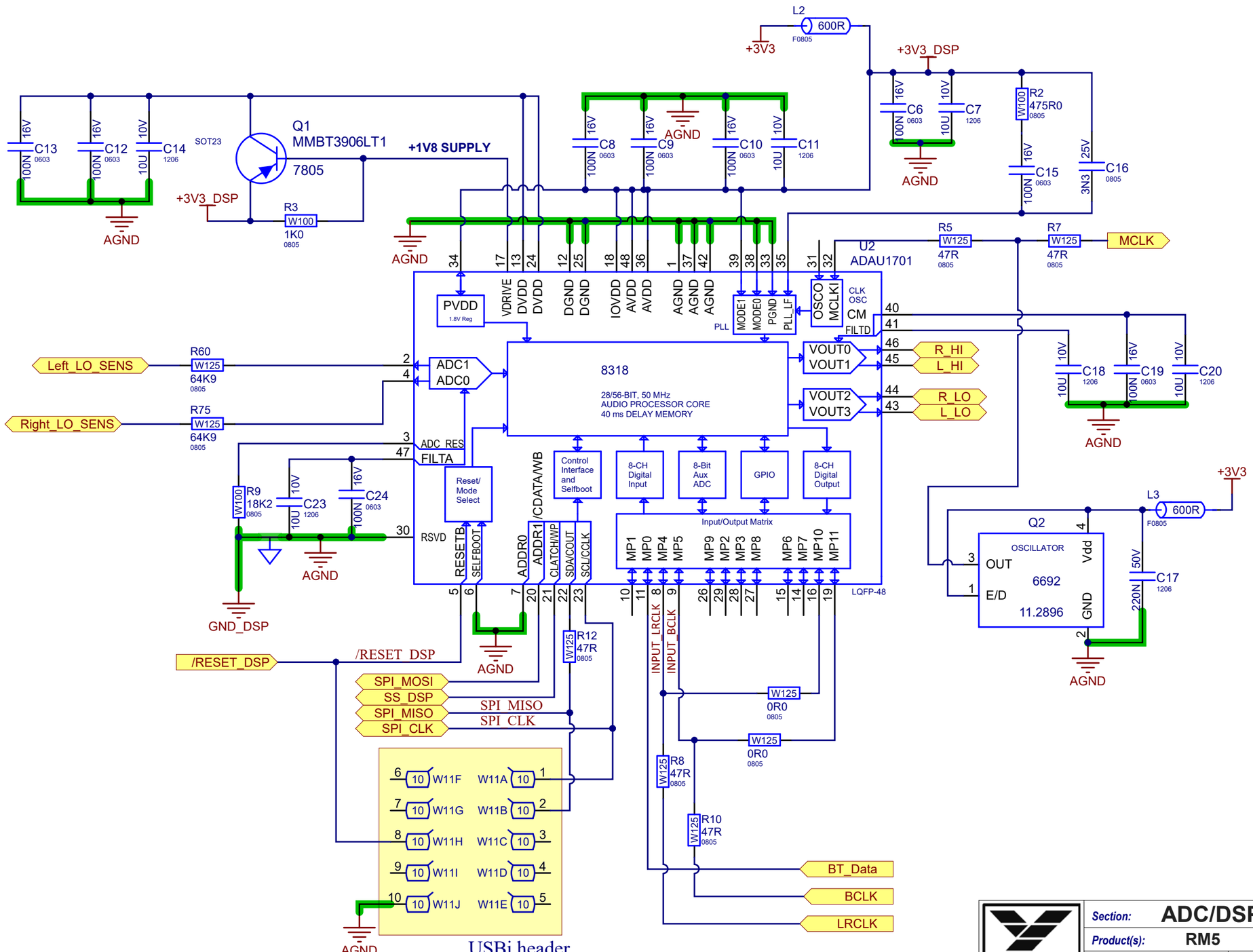

Section:	ADC/DSP		
Product(s):	RM5		
PCB#: X8009	Rev#: V02	EML Rev#: 01	Sheet 4 Of 10
Modified: 21-Jun-18	File: DSP.SCHDOC		Tmp Rev: V031

Yorkville

Microcontroller

10-Pin Cortex Debug Connector		6-Pin TC2030 Footprint
1 VCC	2 SWDIO / TMS	1 VCC
3 GND	4 SWCLK / TCK	2 SWDIO / TMS
5 GND	6 SWO / TDO	3 nRESET
7 NC / RTCK	8 NC / TDI	4 SWCLK / TCK
9 GNDDetect	10 nRESET	5 GND (also connected to GNDDetect)
		6 SWO / TDO

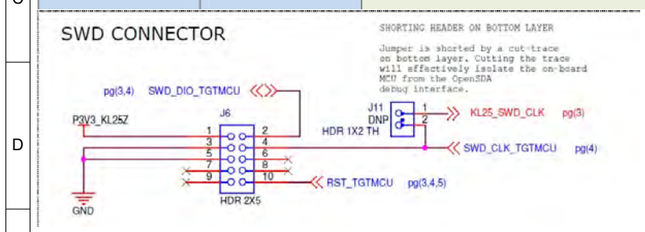

Momentarily connecting N4 to DGND will zero the timout clock and set the sleep timeout to 2 sec. The sleep timeout will remain 2 seconds until the power switch is cycled. It will then revert to 30 minutes.

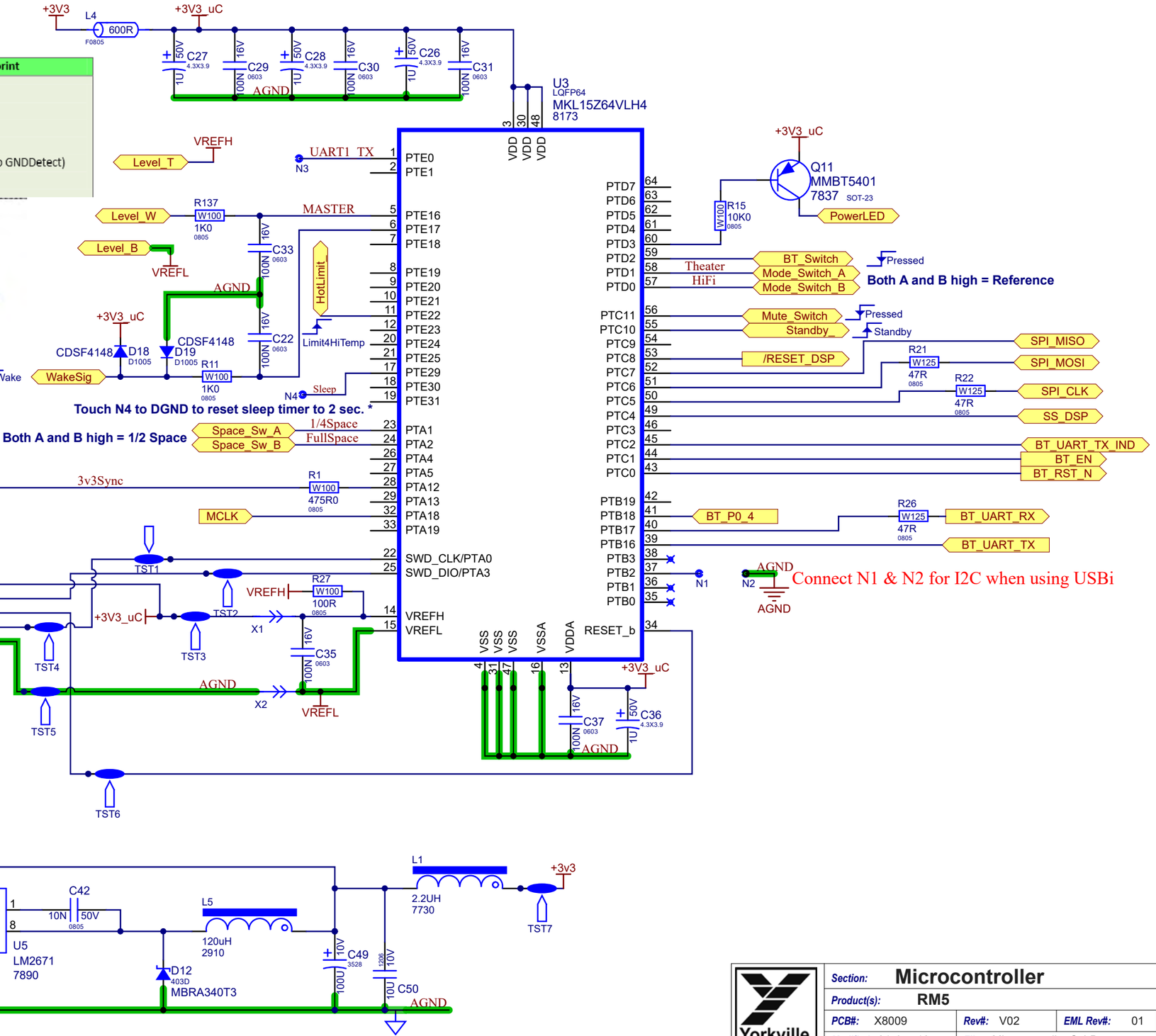

Section: Microcontroller			
Product(s): RM5			
PCB#: X8009	Rev#: V02	EML Rev#: 01	Sheet 5 Of 10
Modified: 21-Jun-18	File: Microcontroller.SchDoc		Tmp Rev: V031

Yorkville

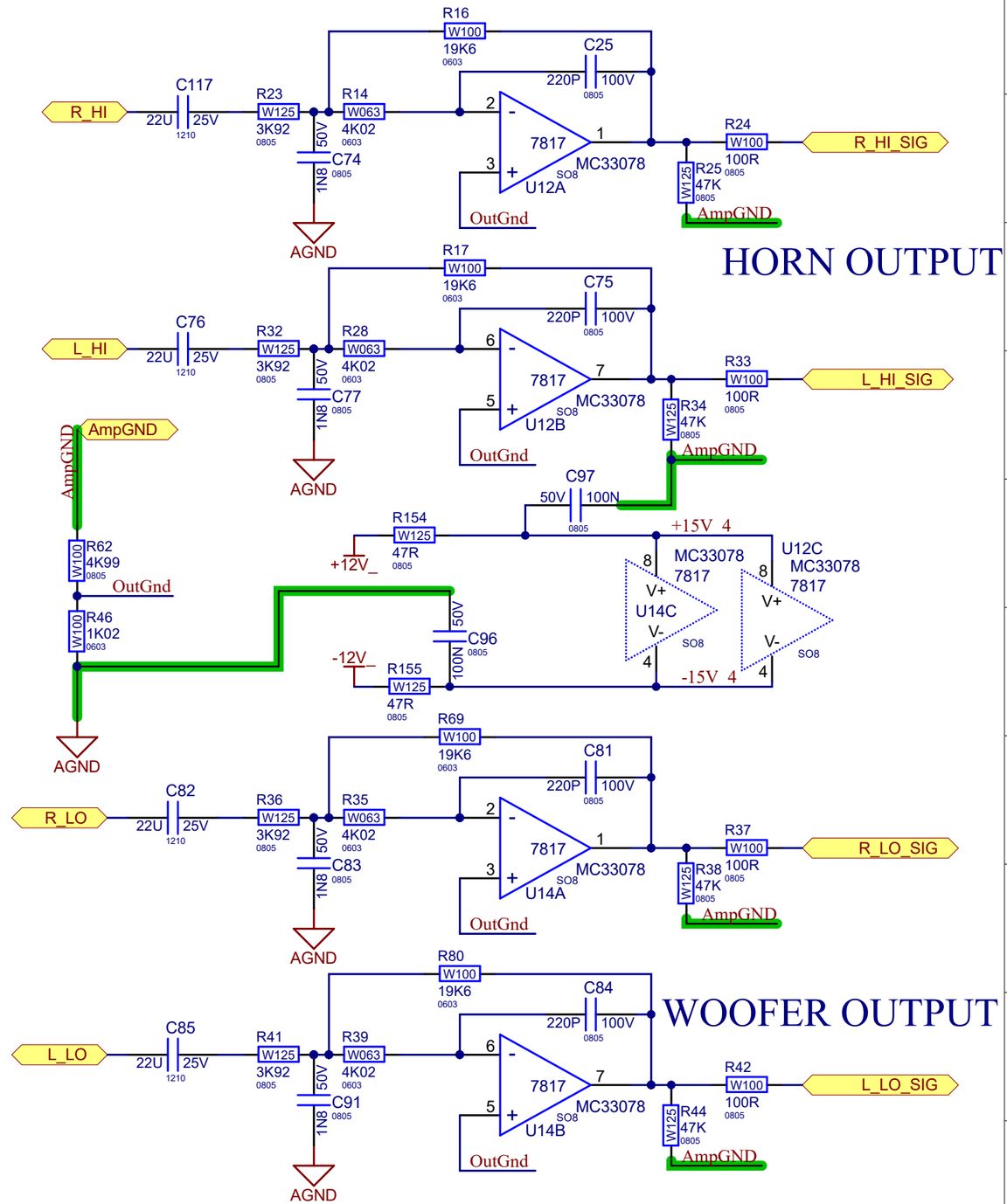

Yorkville	**Section:** DAC Output		
	Product(s): RM5		
PCB#: X8009	**Rev#:** V02	**EML Rev#:** 01	**Sheet** 6 **Of** 10
Modified: 21-Jun-18	**File:** Output.SchDoc		**Tmp Rev:** V031

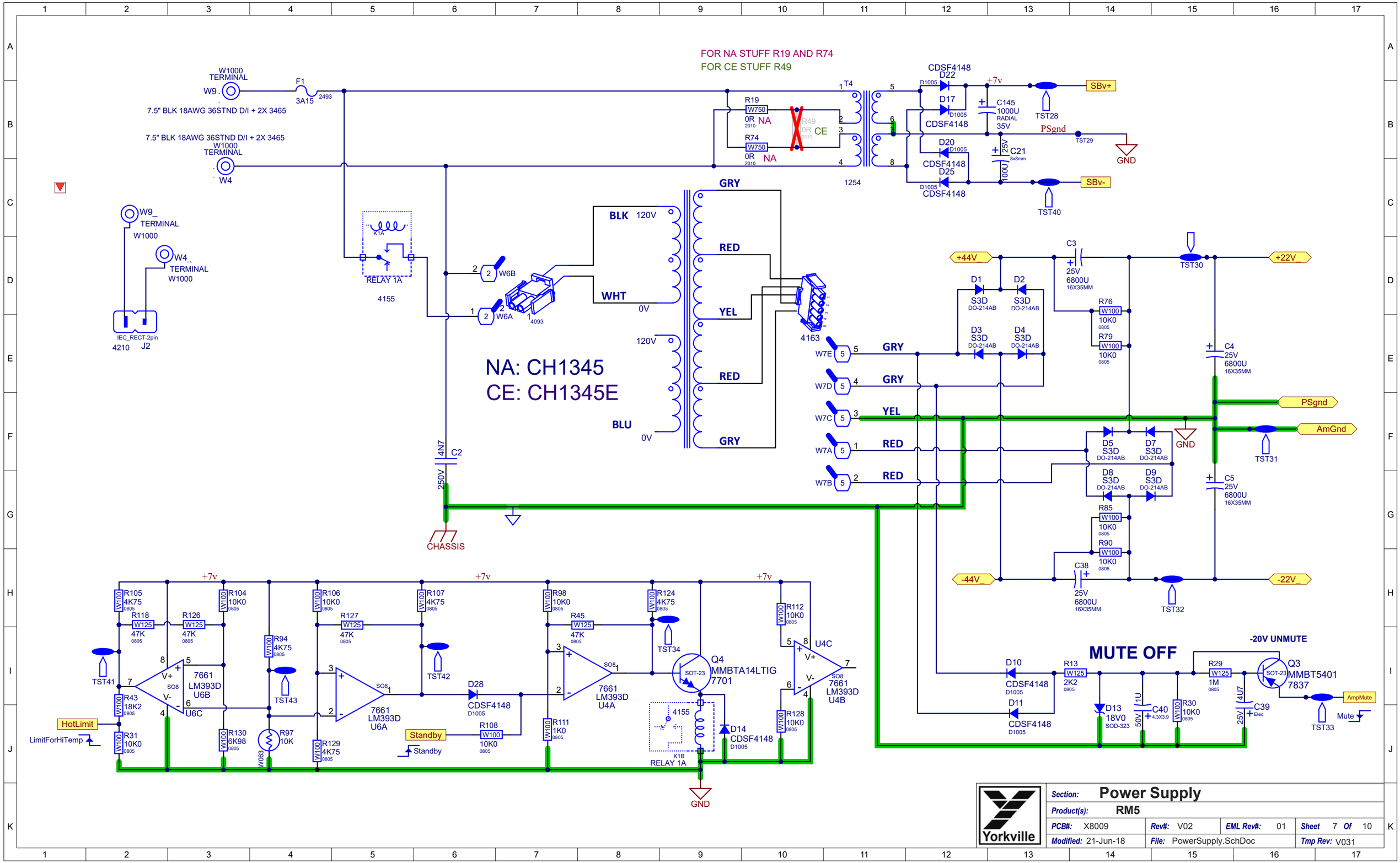
FOR NA STUFF R19 AND R74
FOR CE STUFF R49
W1000 TERMINAL
W9
F1
3A15
7.5" BLK 18AWG 36STND D/I + 2X 3465
W4
R19 W750 0R 2010 NA
R74 W750 0R 2010 NA
R49 0R 2010 CE
T4
1254
CDSF4148 D22
D17
D20
D25
+7v
C145 1000U RADIAL 35V
C21 8x8mm 25V 100U
SBv+
SBv-
PSgnd
TST28
TST29
TST40
GND
W9_ TERMINAL W1000
W4_ TERMINAL W1000
IEC_RECT-2pin
4210 J2
K1A
RELAY 1A
4155
W6B
W6A
4093
BLK 120V
WHT 0V
120V
BLU 0V
GRY
RED
YEL
RED
GRY
4163
W7E
W7D
W7A
W7B
C2 4N7 250V
CHASSIS
NA: CH1345
CE: CH1345E
+44V_
C3 25V 6800U 16X35MM
TST30
+22V_
D1 S3D DO-214AB
D2 S3D DO-214AB
D3 S3D DO-214AB
D4 S3D DO-214AB
R76 W100 10K0 0805
R79 W100 10K0 0805
C4 25V 6800U 16X35MM
PSgnd
AmGnd
TST31
D5 S3D DO-214AB
D7 S3D DO-214AB
D8 S3D DO-214AB
D9 S3D DO-214AB
C5 25V 6800U 16X35MM
R85 W100 10K0 0805
R90 W100 10K0 0805
C38 25V 6800U 16X35MM
-44V_
-22V_
TST32
R105 4K75 0805
R118 W125 47K 0805
R126 W125 47K 0805
R104 10K0 0805
R94 4K75 0805
R106 10K0 0805
R127 W125 47K 0805
R107 4K75 0805
R98 10K0 0805
R45 W125 47K 0805
R124 4K75 0805
R112 10K0 0805
TST41
TST43
TST42
TST34
7661 LM393D U6B
U6C
7661 LM393D U6A
7661 LM393D U4A
7661 LM393D U4B
U4C
Q4 MMBTA14LTIG 7701
SOT-23
D28 CDSF4148 D1005
R43 18K2 0805
R31 10K0 0805
R130 6K98 0805
R97 10K
W063
R129 4K75 0805
R108 W100 10K0 0805
R111 1K0 0805
R128 10K0 0805
HotLimit
LimitForHiTemp
Standby
4155
K1B
RELAY 1A
D14 CDSF4148 D1005
GND
MUTE OFF
-20V UNMUTE
D10 CDSF4148 D1005
D11 CDSF4148 D1005
R13 W125 2K2 0805
D13 18V0 SOD-323
C40 1U 50V 4.3X3.9
R30 10K0 0805
R29 W125 1M 0805
C39 4U7 25V Elec
Q3 MMBT5401 7837
AmpMute
Mute
TST33
Yorkville
Section: Power Supply
Product(s): RM5
PCB#: X8009
Rev#: V02
EML Rev#: 01
Sheet 7 Of 10
Modified: 21-Jun-18
File: PowerSupply.SchDoc
Tmp Rev: V031

DESIGN HISTORY AND INFORMATION

CHANGE HISTORY

#	DATE	VER#	PC#	DESCRIPTION OF CHANGE
1	07-APR-2017	V01	.	RELEASED FOR PRODUCTION
2	01-SEP-2017	V02p1	.	Thermal circuit mods. Changed W8 9-pin to 6-pin plus W3 4-pin for HotLimit signal to micro.
3	12-JUN-2018	V02	9242	Update layout PDF part numbers for C3, C4, C5 and C38 to YS#5863.
4	.	.	.	.
5	.	.	.	.
6	.	.	.	.
7	.	.	.	.
8	.	.	.	.
9	.	.	.	.
10	.	.	.	.
11	.	.	.	.
12	.	.	.	.
13	.	.	.	.

#	DATE	VER#	PC#	DESCRIPTION OF CHANGE
1	.	.	.	.
2	.	.	.	.
3	.	.	.	.
4	.	.	.	.
5	.	.	.	.
6	.	.	.	.
7	.	.	.	.
8	.	.	.	.
9	.	.	.	.
10	.	.	.	.
11	.	.	.	.
12	.	.	.	.
13	.	.	.	.

#	DATE	VER#	PC#	DESCRIPTION OF CHANGE
1	.	.	.	.
2	.	.	.	.
3	.	.	.	.
4	.	.	.	.
5	.	.	.	.
6	.	.	.	.
7	.	.	.	.
8	.	.	.	.
9	.	.	.	.
10	.	.	.	.
11	.	.	.	.
12	.	.	.	.
13	.	.	.	.

THIS SHEET CONTAINS A CHANGE HISTORY LOG, A LIST OF THE POTS & KNOBS AND A LEADS & PINS REFERENCE SECTION.

PCB ASSEMBLY DOCUMENTATION

Cannot open file D:\RM5 AC RTV.jpg

SPECIAL PRODUCTION NOTES

1. Do not bend transformer leads on T1 YS# 1254.
2. Apply RTV to all tall caps and appropriate areas.
3. For North America M1705 stuff R19 and R74.
   For CE M1203 stuff R49 and do not stuff R19 and R74.
4. Use pizza cutter where possible to separate pcb from panel.

Cannot open file D:\RM5 IP RTV.jpg

PCB HARDWARE

SCREWS AND BOLTS	NUTS	STANDOFFS	MISCELLANEOUS

POTENTIOMETERS AND KNOBS

POTENTIOMETERS/SWITCHES AND KNOBS

REF	FUNCTION	POT/SW YS#	STYLE	KNOB#
P1	LEVEL	4453	P40	9086
S1	MODE	4200	ROT3	9086
S2	On/Off	3522	.	9089
S3	BT Mode	3439	.	9088
.	.	.	.	.
.	.	.	.	.
.	.	.	.	.
.	.	.	.	.
.	.	.	.	.
.	.	.	.	.
.	.	.	.	.
.	.	.	.	.
.	.	.	.	.

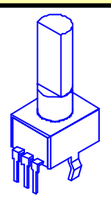

"STYLE_P32"

9089

9088

THIS SHEET CONTAINS SPECIAL PRODUCTION NOTES AND A LIST OF PCB HARDWARE PARTS REQUIRED FOR THE BUILD.

PANEL PARTS

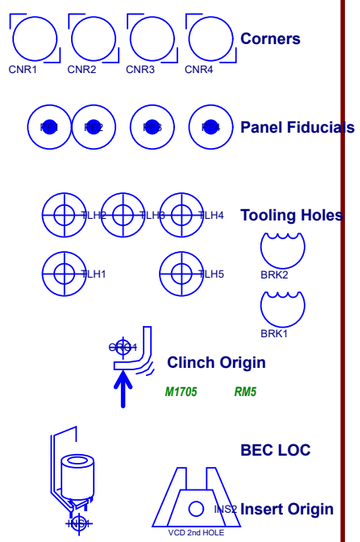

BlankSize - 285.000mmX152.000mm 11220X5984

PCB Title

Step & Repeat: X1@1.234Y1@123.4

1

1.234

1

123.4

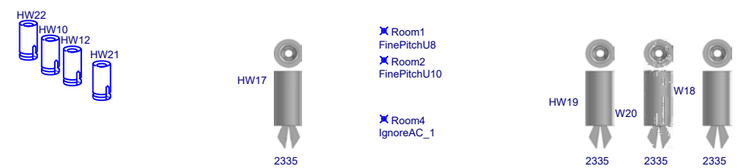

DOCUMENTATION

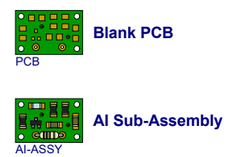

Blank PCB

AI Sub-Assembly

See PcbDoc for default clearance rules.
Note: You must define your own rules for -HI and +HI.

Section:	ECAD Incidentals			
Product(s):	RM5			
PCB#: X8009	Rev#: V02	EML Rev#: 01	Sheet 10 Of 10	
Modified: 21-Jun-18	File: ECO.SchDoc		Tmp Rev: V031	

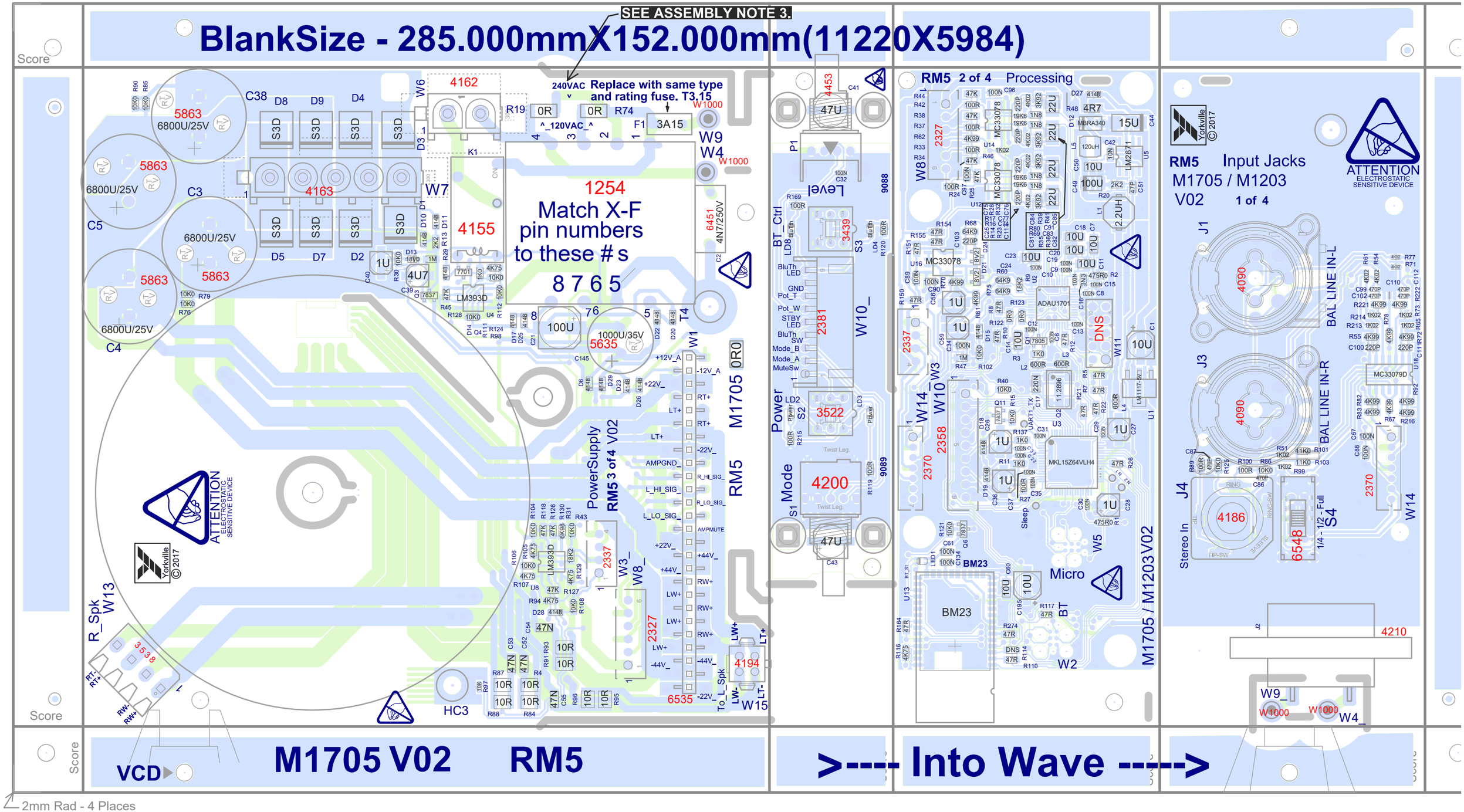

M1705 / M1203 V02

PCB ASSEMBLY DOCUMENTATION

SPECIAL PRODUCTION NOTES

1. Do not bend transformer leads on T1 YS# 1254.
2. Apply RTV to all tall caps and appropriate areas.
3. For North America M1705 stuff R19 and R74.
   For CE M1203 stuff R49 and do not stuff R19 and R74.
4. Use pizza cutter where possible to separate pcb from panel.

PCB HARDWARE

SCREWS AND BOLTS	NUTS	STANDOFFS	MISCELLANEOUS

POTENTIOMETERS AND KNOBS

POTENTIOMETERS/SWITCHES AND KNOBS				
REF	FUNCTION	POT/SW YS#	STYLE	KNOB#
P1	LEVEL	4453	P40	9086
S1	MODE	4200	ROT3	9086
S2	On/Off	3522	.	9089
S3	BT Mode	3439	.	9088
.	.	.	.	.
.	.	.	.	.
.	.	.	.	.
.	.	.	.	.
.	.	.	.	.
.	.	.	.	.
.	.	.	.	.
.	.	.	.	.
.	.	.	.	.

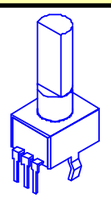

"STYLE_P32"

9089

9088

THIS SHEET CONTAINS SPECIAL PRODUCTION NOTES AND A LIST OF PCB HARDWARE PARTS REQUIRED FOR THE BUILD.

Yorkville	Section: Assembly Documentation			
	Product(s): RM5			
	PCB#: X8009	Rev#: V02	EML Rev#: 01	Sheet 1 Of 9
	Modified: 10-Oct-18	File: Assembly.SchDoc		Tmp Rev: V031

DESIGN HISTORY AND INFORMATION

CHANGE HISTORY

#	DATE	VER#	PC#	DESCRIPTION OF CHANGE
1	07-APR-2017	V01	.	RELEASED FOR PRODUCTION
2	01-SEP-2017	V02p1	.	Thermal circuit mods. Changed W8 9-pin to 6-pin plus W3 4-pin for HotLimit signal to micro.
3	12-JUN-2018	V02	9242	Update layout PDF part numbers for C3, C4, C5 and C38 to YS#5863.
4	10-OCT-2018	.	.	Remove RTV instructions from Combi-Jacks. Will apply foam tape in Wiring.
5	.	.	.	.
6	.	.	.	.
7	.	.	.	.
8	.	.	.	.
9	.	.	.	.
10	.	.	.	.
11	.	.	.	.
12	.	.	.	.
13	.	.	.	.

#	DATE	VER#	PC#	DESCRIPTION OF CHANGE
1	.	.	.	.
2	.	.	.	.
3	.	.	.	.
4	.	.	.	.
5	.	.	.	.
6	.	.	.	.
7	.	.	.	.
8	.	.	.	.
9	.	.	.	.
10	.	.	.	.
11	.	.	.	.
12	.	.	.	.
13	.	.	.	.

#	DATE	VER#	PC#	DESCRIPTION OF CHANGE
1	.	.	.	.
2	.	.	.	.
3	.	.	.	.
4	.	.	.	.
5	.	.	.	.
6	.	.	.	.
7	.	.	.	.
8	.	.	.	.
9	.	.	.	.
10	.	.	.	.
11	.	.	.	.
12	.	.	.	.
13	.	.	.	.

THIS SHEET CONTAINS A CHANGE HISTORY LOG, A LIST OF THE POTS & KNOBS AND A LEADS & PINS REFERENCE SECTION.

RM5

ADVANCED ACTIVE STUDIO MONITOR

Congratulations on your purchase of the ART RM5 advanced active studio monitors! Use this quick start guide to help you get up and running so you can enjoy your music with the exceptional clarity and impact that the RM5's will provide.

Mounting the Stands - (see image on reverse) Place the boxes face down on a soft surface to prevent scratching the front face. If mounting the stand without the spacer, use 4 x short 10-32 screws for each stand. Positioning the spacer on the top 2 mounting points will result in a monitor angle of 0 degrees.

Note: when using stand spacers, 2 long 10-32 screws must be used).

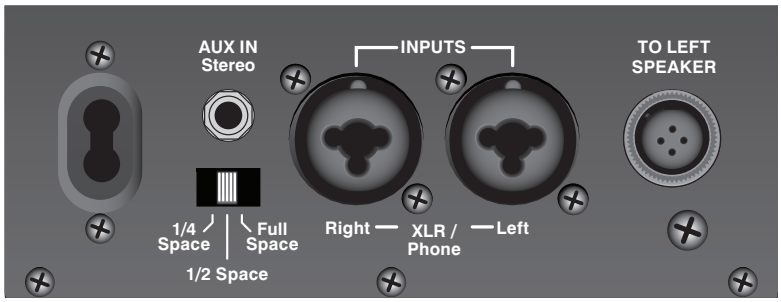

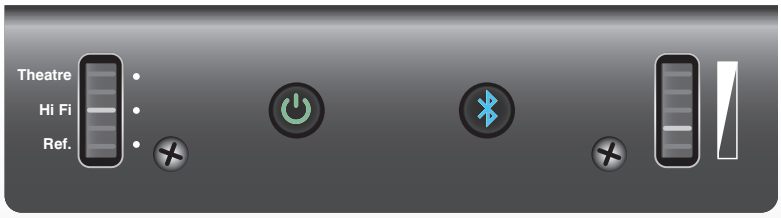

Balanced Left and Right Combi Jack Inputs - The Combi Jack Inputs allow line level sources such as passive mixer outputs, recording interface outputs or CD players to be connected.

AUX in Stereo Input - The stereo 1/8-inch Input allows digital media players (laptops, tablets and smart phones) to be connected.

Full Space, 1/2 Space, 1/4 Space Switch - This feature compensates for possible low frequency re-enforcement due to close proximity to walls. Place this switch in Full Space mode if the RM5's are not close to any walls. If the Monitors are placed close to a back wall, place this switch in the 1/2 Space mode. If the Monitors are placed close to both a back wall and a side wall, place this switch in 1/4 Space mode.

Standby/Power Switch - To turn the unit on, press this switch in, the green LED will illuminate.

Level - The level control adjusts the volume level of all inputs.

Mode Selector
Ref Mode - Measures flat across the frequency spectrum.
HiFi Mode - Boosted low end and enhanced highs make this mode ideal for general music listening.
Theatre Mode - Boosted low end and enhanced mids make this mode representative of the movie theatre experience.

Bluetooth™ Operation - If connecting to the unit for the first time, press and hold the Bluetooth™ switch for 4 seconds. Once you release, a new device will be able to connect to the RM5. When turning the unit on, The RM5 is in Bluetooth™ Linkback mode by default, which attempts to connect to previously connected devices. See the user manual for more detailed Bluetooth™ operation.

Auto Standby - If there is no signal on any of the inputs for more than 20 minutes, the unit will enter Standby Mode. Once signal is applied to any of the inputs, including Bluetooth™, the unit will immediately wake up.

What's included

- 1 active RM5 unit
- 1 passive RM5 unit
- 2 aluminum Stands
- 1 IEC 8 foot Power Cable
- 1 four conductor 12 foot amp out cable
- 1 Allen key
- 8 short 10-32 screws (for mounting stands)
- 2 stand spacers (to change angle of stands)
- 4 long 10-32 screws (for use with spacers)

A R T

Designed & Distributed by: **APPLIED RESEARCH AND TECHNOLOGY** www.artproaudio.com

Printed In CANADA
QuickStart-ART-RM5-1v4-CAN • YS#QSTART-RM5 • January 22, 2020

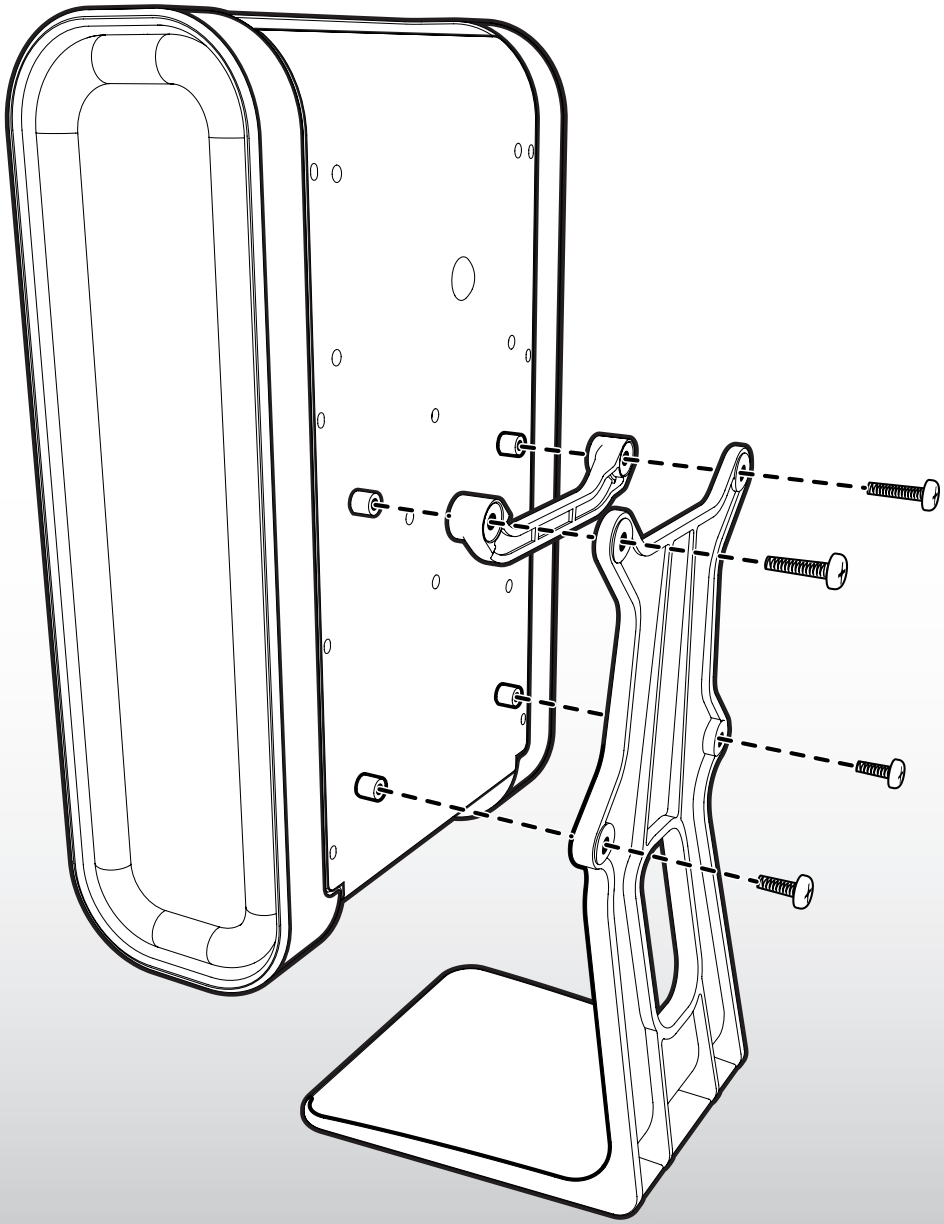

To get the full Owner's Manual please visit our website at
http://www.yorkville.com/manuals/ or, if you need a printed version call **905-837-8777**

A R T

Designed & Distributed by: **APPLIED RESEARCH AND TECHNOLOGY** **www.artproaudio.com**

Yorkville Sound
550 Granite Court
Pickering, Ontario
Canada L1W 3Y8

Auto Attend: (905) 837-8550 Fax: (905) 837-8746

www.yorkville.com